Ocean Water Desalination Draft Environmental Impact Report Overview

May 14, 2018

City of Culver City

Potential Water Supply 2025

West Basin Supplies:
- 2 Drinking
- 1 Non-drinking

Imported Supply:
- Reduction from 55%

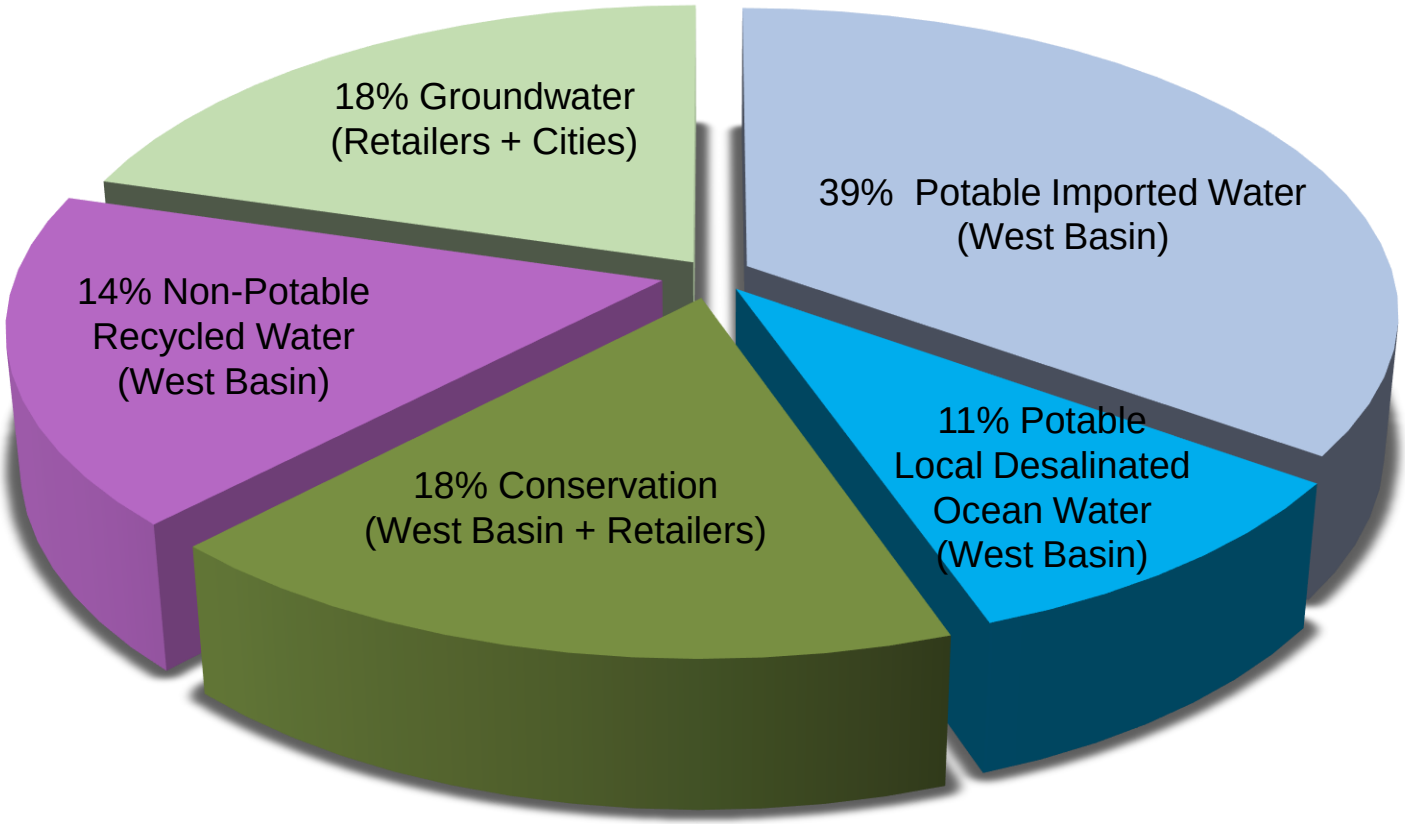

Source: 2015 West Basin Urban Water Management Plan

Project Objectives

- Diversify West Basin's water source portfolio to **increase reliability** in the near and intermediate term (5–15 years) and the long term (15–30 years) while **reducing reliance on imported** water.

- Improve water security through West Basin's increased **local control** of water **supplies and infrastructure**.

- Improve West Basin's local control of future water costs and long-term **price stability**.

- Improve **climate resiliency** by developing a water source that is less susceptible to hydrologic variability.

- Develop a potable water supply that is **economically viable and environmentally responsible**.

Project Overview

Key Project Components

- Onshore Treatment Facility
- Offshore Ocean Water Intake
- Offshore Concentrate Discharge
- Onshore Drinking Water Delivery

Capacity

- Local Project: 20 MGD (Initial)
- Regional Project: 60 MGD (Potential Expansion)

Local Project North Site Comparison

Existing Condition

North Site, El Segundo Generating Station

Intake and Discharge Facilities

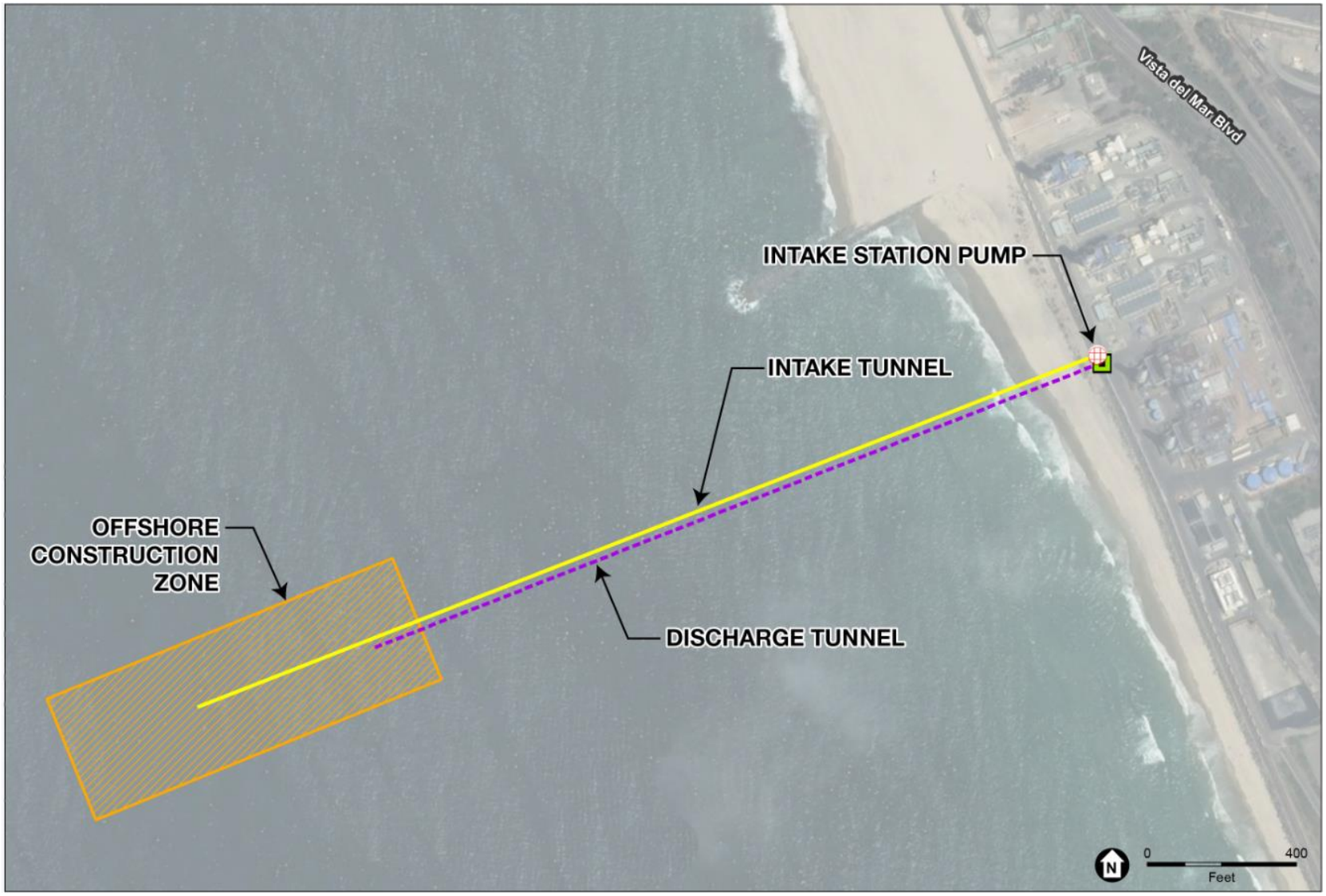

Drinking Water Conveyance System

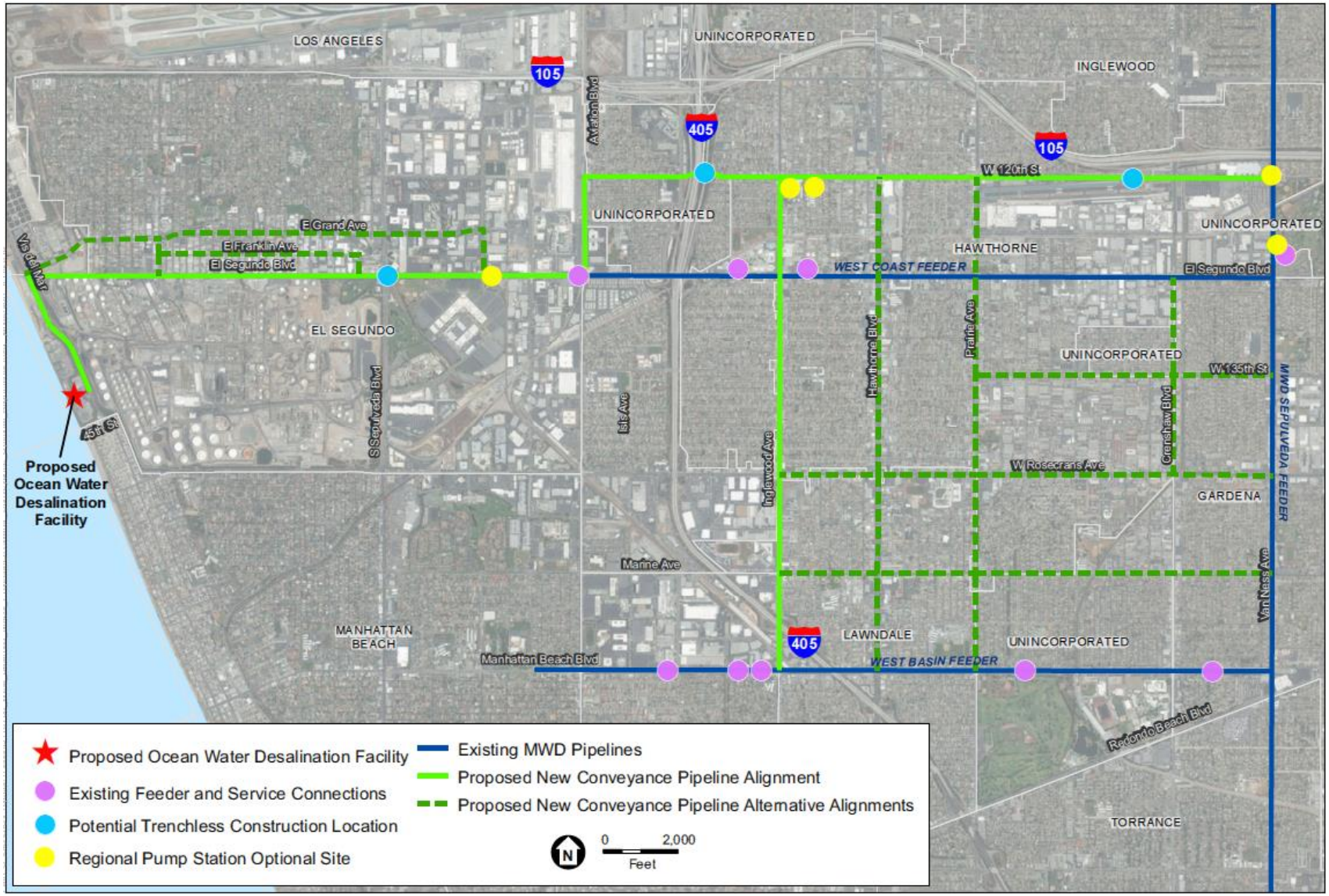

Draft EIR Contents

Section 1, Executive Summary

Section 2, Introduction and Project Background

Section 3, Project Description

Section 4, Basis of Cumulative Analysis

Section 5, Environmental Analysis

Section 6, Other CEQA Considerations

Section 7, Alternatives to the Proposed Project

Section 8, Effects Found Not to Be Significant

Section 9, List of Preparers

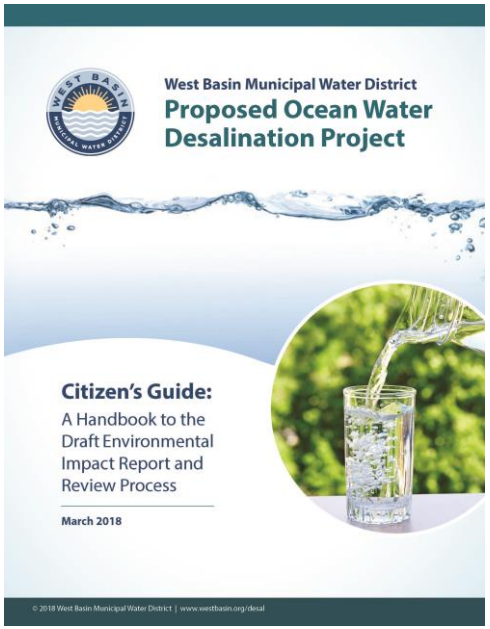

Section 5, Environmental Analysis

Resource	Significance Determination
Aesthetics	Less than Significant with Mitigation
Air Quality	Significant and Unavoidable during construction
Terrestrial Biological Resources	Less than Significant with Mitigation
Cultural Resources/Tribal Cultural Resources	Less than Significant with Mitigation
Geology, Soils, and Seismicity	Less than Significant
Energy	Less than Significant
Greenhouse Gas Emissions	Less than Significant with Mitigation
Hazards and Hazardous Materials	Less than Significant with Mitigation
Hydrology and Water Quality	Less than Significant with Mitigation
Land Use and Planning	Less than Significant
Marine Biological Resources	Less than Significant with Mitigation
Noise	Significant and Unavoidable during construction
Public Services	Less than Significant
Recreation	Les than Significant with Mitigation
Traffic and Transportation	Less than Significant with Mitigation
Utilities	Less than Significant

Report Availability and Public Comment

- Comment Period
  - Tuesday, March 27, 2018 to Monday, **June 25, 2018, 5:00 P.M.** *– New 31 day extension*
- Public Meetings

Wednesday, April 25, 2018 6:00 P.M. – 9:00 P.M. Richmond Street Elementary School Auditorium 615 Richmond Street El Segundo, CA 90245	**Saturday, May 12, 2018** **10:00 A.M. – 1:00 P.M.** **Richmond Street Elementary School Auditorium** **615 Richmond Street** **El Segundo, CA 90245**

- Submit Comments
  - **Mail**:

    Desalination Draft EIR

    Zita Yu, Ph.D., P.E., Project Manager
    West Basin Municipal Water District

    17140 South Avalon Boulevard,
    Carson, CA 90746-1296
  - **Email**:

    DesalEIR@WestBasin.org
  - **Online**:

    Comment Form at
    www.westbasin.org/desal
- Draft EIR available
  - www.westbasin.org/desal (electronic copy)
  - West Basin Municipal Water District (hard copy)
  - 10 public libraries in the service area (hard copies)

West Basin Municipal Water District

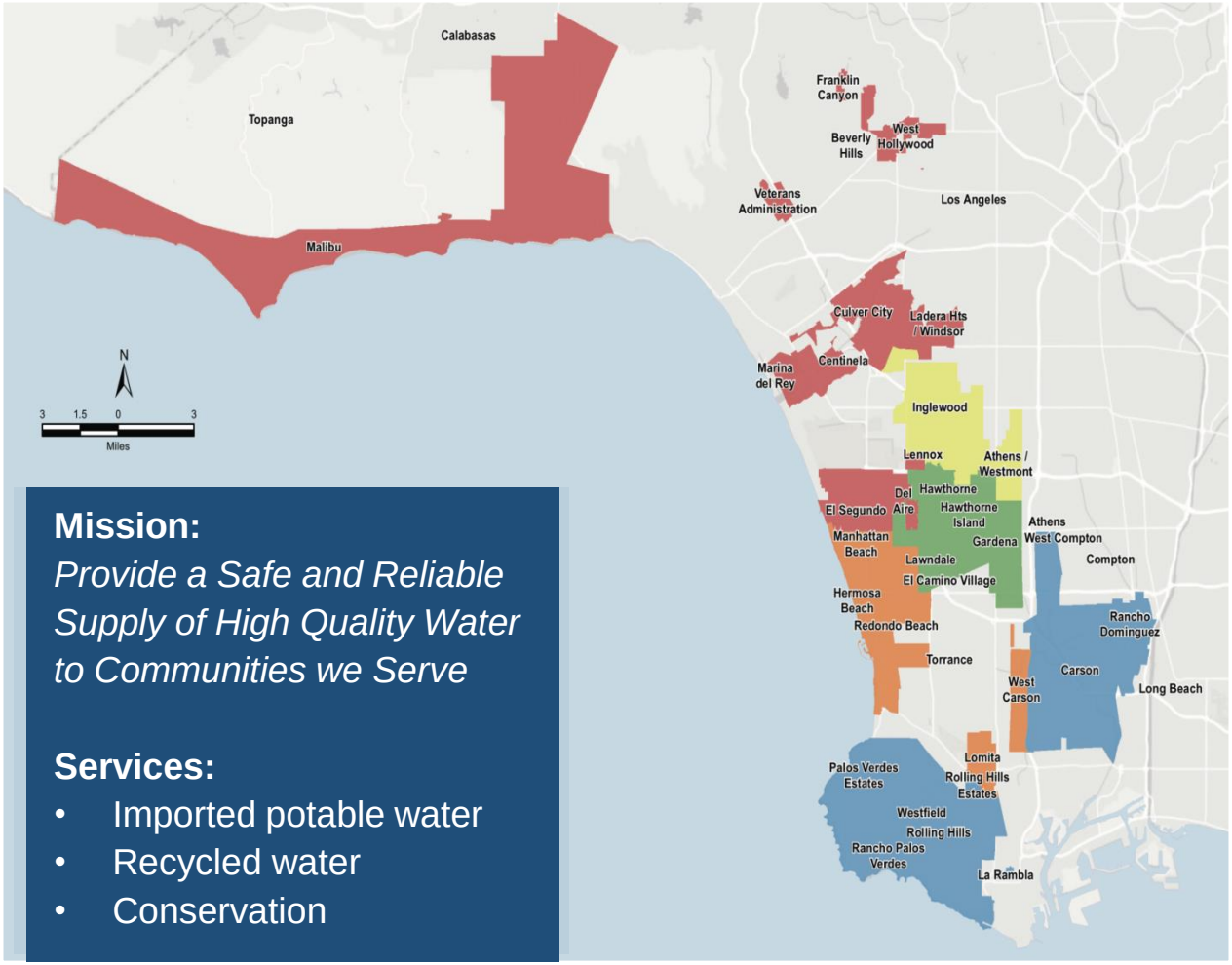

Mission:
Provide a Safe and Reliable Supply of High Quality Water to Communities we Serve

Services:

- Imported potable water
- Recycled water
- Conservation

Water Supply Portfolio Diversification

Pre-1947

1990

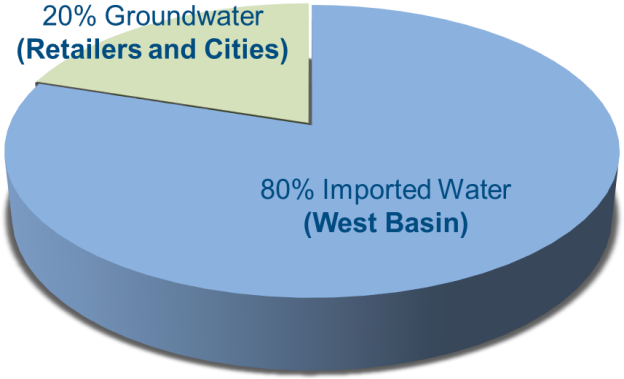

Current

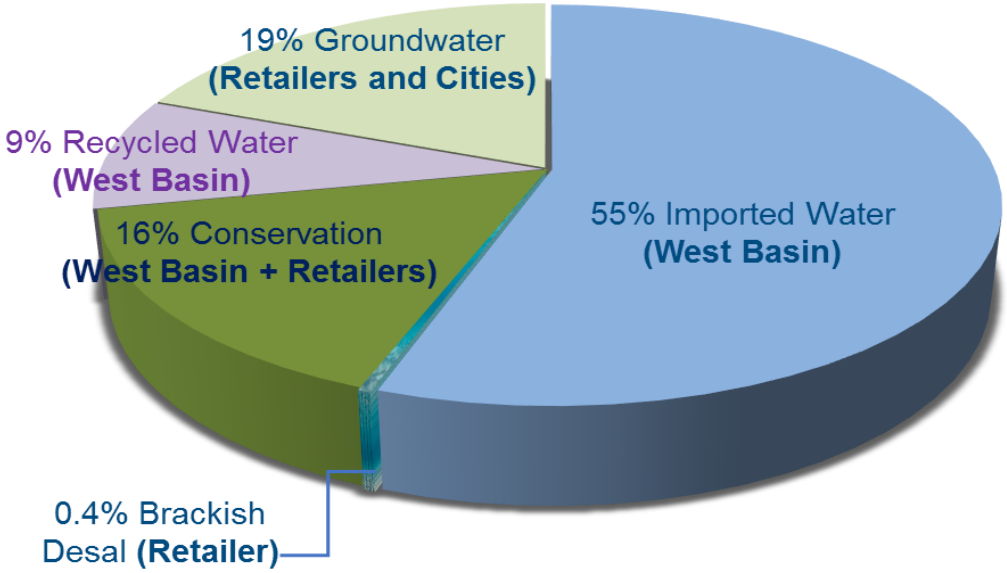

West Basin Supplies:

- 1 Drinking
- 1 Non-drinking

Conservation Programs

Distributed over **300,000** water-saving devices

300% return on investments for our customers

Conserved more than **167** billion gallons of potable water

Water Recycling

Edward C. Little Water Recycling Facility
El Segundo, Calif.

- Nearly **200 billion gallons** of water produced
- Over **13,000** visitors annually
- **Five** “designer” waters

El Segundo Generating Station Sites

Local Project North Site Comparison

Existing Condition

North Site, ESGS

Local Project South Site Comparison

Existing Condition

South Site, ESGS

Intake: Wedgewire Screens

Ocean Plan Screen Requirements

Screen Opening Size
- 1 mm. (0.04 in.)

Through-screen Velocity
- Less than 0.5 feet per second

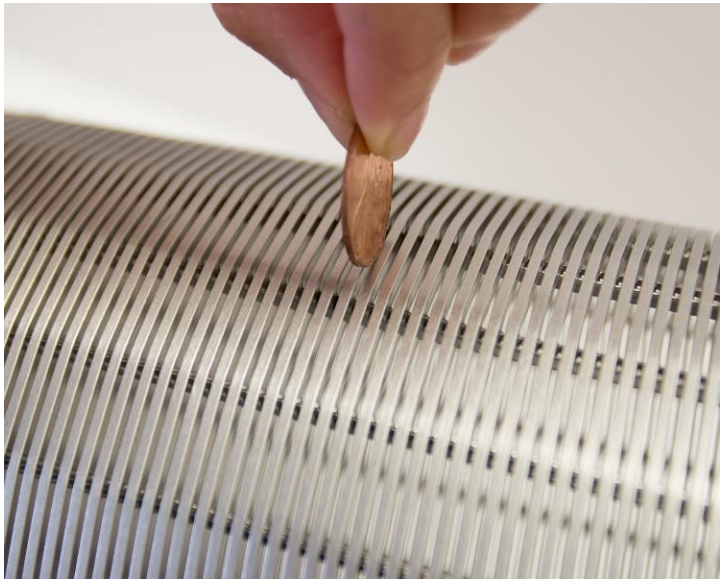

Discharge: Preliminary Concept

Existing

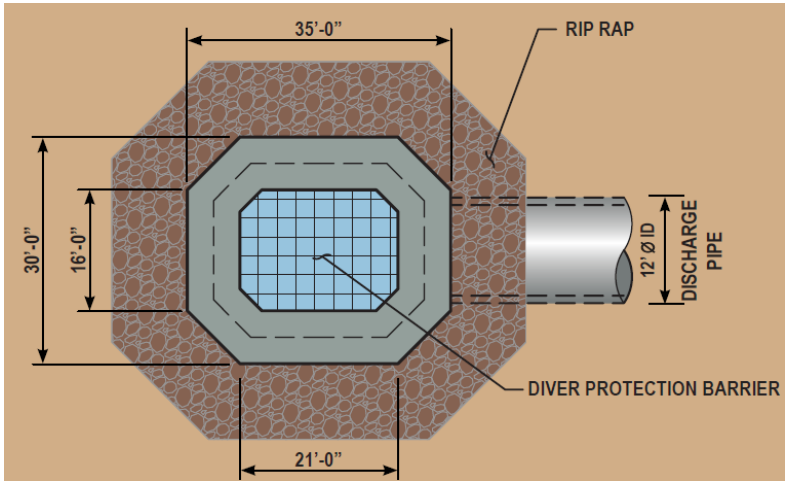

Proposed Conceptual

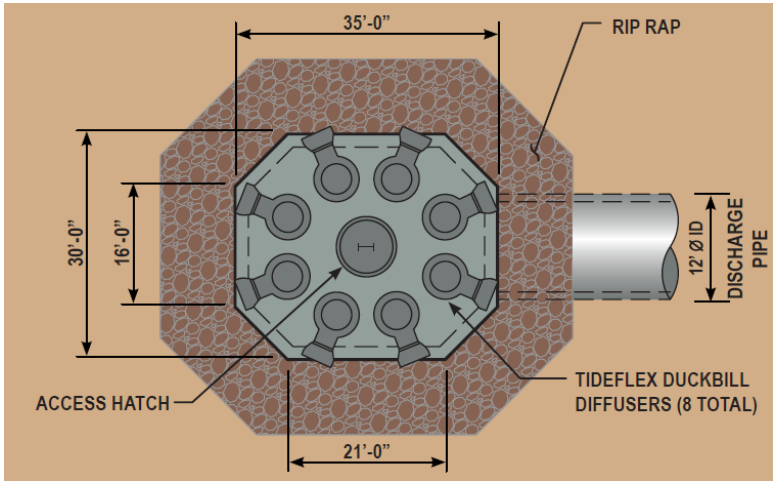

Highlights of Draft EIR Findings

Construction Phase

- Air
- Noise

Operational Phase

- Visual Character
- Ocean Water Quality
- Marine Biology
- Energy Use
- GHG Emissions
- Sea Level Rise