Freedom of Layout

Because the machine is installed within the hoistway, there are far fewer restrictions on building design. Architects and interior designers have more design freedom than ever before.

More architectural freedom

Architects, builders, and even interior designers will appreciate the new design freedom that comes with the machine-room-less system. A machine room is no longer needed, as all machineries successfully fit into the hoistway, except the control panel, which can be placed within a 98-foot, 5-inch radius of the traction machine. Also, the load stress of our conventional elevator with a machine room applies on the building structure, whereas the guide rails of DIAMOND TRAC support as much as 75 percent of the stress, for building friendliness.

Machine room space savings*

Miniaturization of the hoisting machine using a permanent magnet gearless motor allows the machine to be placed inside the elevator hoistway. The result is a dramatic reduction in machine room size whereby only space for the controller needs to be considered. Furthermore, the controller room location is now more flexible, resulting in building design freedom.

*This product complies with both ASME A17.1 and other applicable codes.

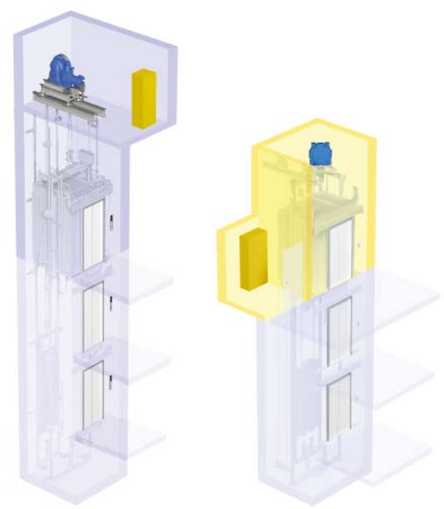

GPM-IIILU (Conventional)

DIAMOND TRAC

Miniaturized and optimally configured

Mitsubishi Electric has succeeded in miniaturizing key elevator equipment. The gearless traction machine with PM motor is installed within the hoistway. This arrangement frees up space normally required for separate machine rooms or penthouses. Equipment is configured for easy maintenance from car top, and the entire compact system is optimally organized for performance and service.

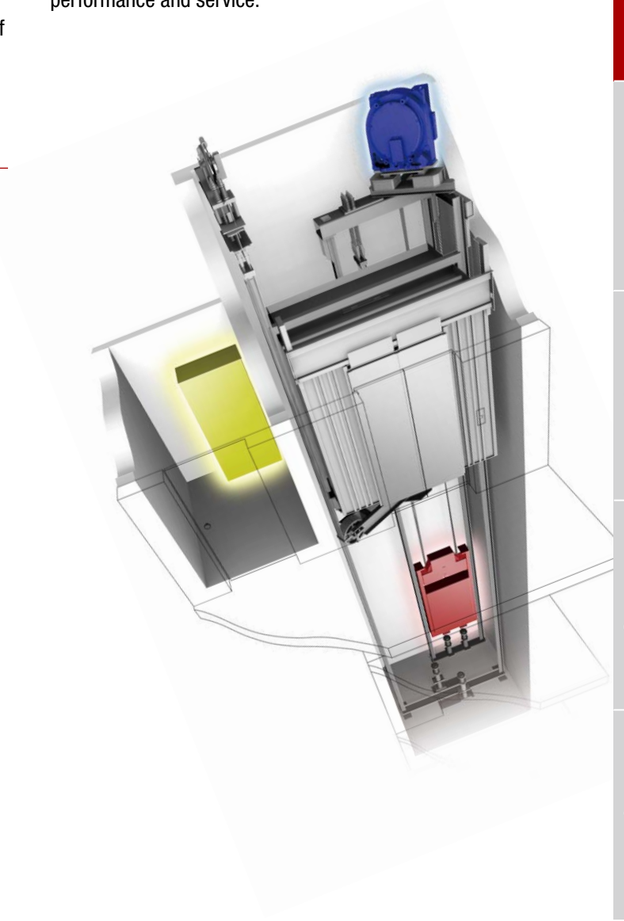

BASIC SPECIFICATIONS

For passenger CAPACITY: 2000lbs ~ 4000lbs

Capacity, Rated Speed, Door Type, Car Inside & Hoistway Dimensions*1

<Rated Speed 200FPM to 500FPM>

Opening	Rated speed (fpm)	Capacity (lbs)	Door type*2	CWT Location	Car inside clear dimensions		Entrance width JJ (ft./in.)	Minimum hoistway dimensions*3	
					Width (ft./in.)	Depth (ft./in.)		AH: Width (ft./in.)*4	BH: Depth (ft./in.)*7
Front	200 350	2000	SS	Rear	5'-8"	4'-3 3/4"	3'-0"	7'-6"	6'-11"
	200	2500	SS or CO		6'-8"		3'-6"	8'-6"	
	350	3000				4'-8 3/4"			7'-4"
	400 500	3500				5'-4 3/4"			8'-0"
Front & Rear				Side		5'-8 3/16"		9'-7"	7'-11 1/4"
Front	200 350	4000	CO	Rear	7'-8"	5'-4 3/4"	4'-0"	9'-7"	8'-0"

<Rated Speed 200FPM and 350FPM>

Opening	Capacity (lbs)	Minimum hoistway dimensions*3					
		Rated speed					
		200fpm			350fpm		
		PD (ft./in.)*5,7	OH*6 (ft./in.)		PD (ft./in.)*5,7	OH*6 (ft./in.)	
			Canopy height 8'-0"	Canopy height 9'-6"		Canopy height 8'-0"	Canopy height 9'-6"
Front	2000	5'-5 1/2"	14'-3"	15'-8 11/16"	5'-11 1/2"	14'-6"	15'-11 11/16"
	2500						
	3000						
	3500						
Front & Rear							
Front	4000	5'-8"	15'-1"	16'-6 11/16"	6'-1"	15'-5"	16'-10 11/16"

<Rated Speed 400FPM and 500FPM>

Opening	Capacity (lbs)	Minimum hoistway dimensions*3					
		Rated speed					
		400fpm			500fpm		
		PD (ft./in.)*5,7	OH*6 (ft./in.)		PD (ft./in.)*5,7	OH*6 (ft./in.)	
			Canopy height 8'-0"	Canopy height 9'-6"		Canopy height 8'-0"	Canopy height 9'-6"
Front	2500	6'-3"	15'-3"	16'-8 11/16"	7'-5"	16'-1"	17'-6 11/16"
	3000						
	3500						
Front & Rear		6'-5"			7'-6 1/2"		

Notes
*1. The contents of these tables are standard specifications. They are based on ASME A17.1 and applicable to both seismic and non-seismic zones. Please consult your local sales office for other specifications. (Email: EEDSALES@meus.mea.com)
*2. SS : Single-Slide door, CO: Center-Open doors
*3. Hoistway dimensions (AH, BH, PD, OH) are for standard specifications.
*4. The AH dimensions indicate for one car. For AH dimensions of 2 and 3 car, please refer to left table. AU dimension in 2 and 3 car layout is same as AH of 1 car. These are values after waterproofing and do not include plumb tolerance.
*5. Pit depth in this drawing is obtained when floor recess is 3/4". When floor recess is greater than 3/4", extend pit depth as well. Max. floor recess is 1 1/4".
*6. The minimum OH dimensions are obtained on condition that:
A. Canopy height = 8'-0"
B. OH dimensions does not include the hoisting beams.
C. Please consult your structural engineer for hoisting beam size, but for please consider allowing 8" ~10" (6" ~ 8" beam + 2" gap).
*7. If occupied space below hoistway is provided, required hoistway dimensions will be changed. Please consult your local sales office for details.

Specifications

Rated Speed		200fpm	350fpm	400fpm	500fpm
Maximum number of stops		10		24	
Maximum travel (ft.)	2000 (lbs)	75'-0"	98'-5"	-	
	2500~3500 (lbs)			262'-5"	
	4000 (lbs)	196'-10"		-	
Minimum floor height (ft.)		8'-11" *8			

For travel greater than shown above, please consult your local sales office or EEDSALES@meus.mea.com.

AH dimension for 2 and 3 Car

Opening	Capacity (lbs)	AH dimension (ft./in.)	
		2 Car	3 Car
Front	2000	15'-4"	23'-2"
	2500	17'-4"	26'-2"
	3000		
	3500		
Front & Rear		19'-6"	
Front	4000		29'-5"

Power Feeder Data for One Car*11

Rated speed (fpm)	Capacity (lbs)	Traction motor (HP)	Current at 480V*9		Power supply capacity (kVA)	Heat emission (BTU/hr)	
			FLU (A)	FLAcc (A)		Hoistway*10	Control panel
200	2000	7.5	12	21	7	3070	2730
	2500	9.5	15	26	8	3750	3240
	3000	11.9	18	30	9	3580	3750
	3500	13.3	20	35	10	3750	4270
	4000	16.1	23	40	12	4270	4780
350	2000	13	20	35	10	3750	4270
	2500	17.4	25	43	13	4100	5120
	3000	20.1	30	52	15	4440	5970
	3500	24.1	34	60	17	4950	7000
	4000	26.8	39	69	19	5970	8360
400	2500	20.1	28	49	14	2880	7730
	3000	22.8	34	59	17	3280	8970
	3500	26.8	39	69	19	3680	10210
500	2500	24.1	35	61	17	3380	9280
	3000	28.2	42	73	21	3890	10830
	3500	33.5	48	85	24	4390	12380

Notes
*8. Some of specifications require more than the value 8'-11" as a minimum height. Please consult your local sales office if floor height is less than 8'-11".
*9. If power supply voltage is other than 480V, FLU and FLAcc current are obtained by the following formulas.
FLU, FLAcc current (A) at E = (Current at 480V) x (480 / E) (E: Power supply voltage (V))
*10. Heat emitted from car lighting is included.
*11. Start / hour (time) is as follows.
Rated speed 200fpm: 120 times
Rated speed 350fpm: 150 times
Rated speed 400 and 500fpm: 180 times

Profile
Design
Functions
Spec.
Info.

BASIC LAYOUTS

DIAMOND TRAC

For passenger CAPACITY: 2000lbs ~ 4000lbs

Front Opening

Hoistway Plan (example)

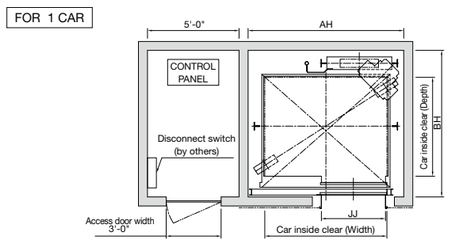

Shown for Single-Slide door

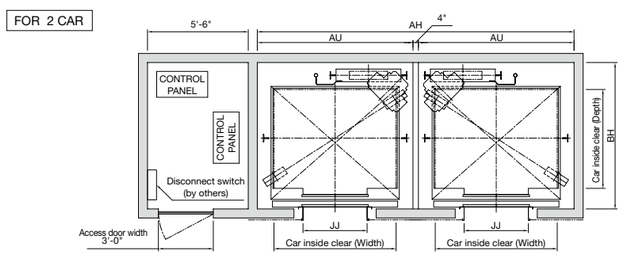

Shown for Center-Open doors

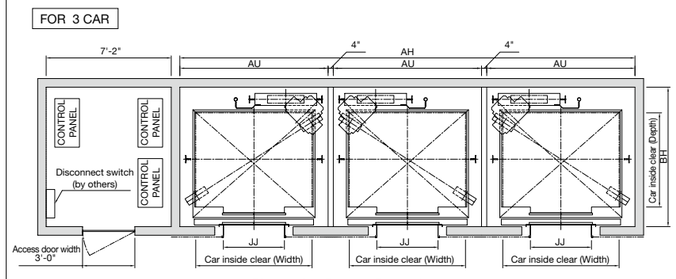

Shown for Center-Open doors

Hoistway Section

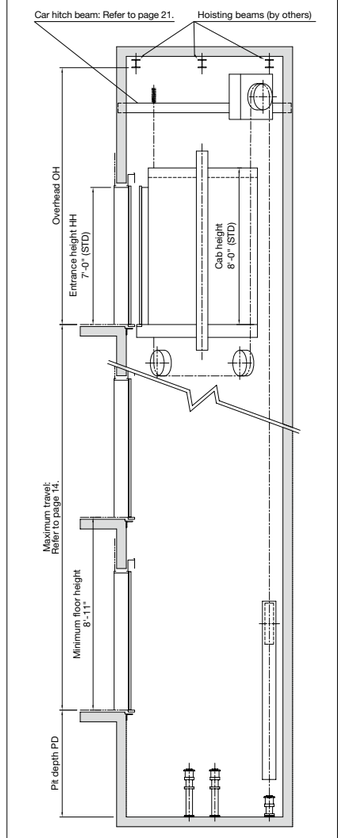

For passenger CAPACITY: 3500lbs

Front & Rear Opening

Hoistway Plan

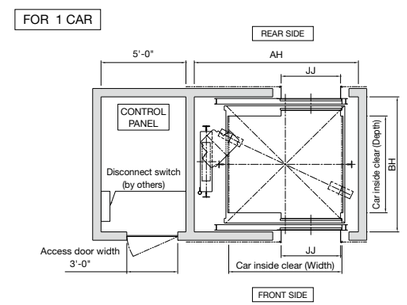

Shown for Single-Slide door

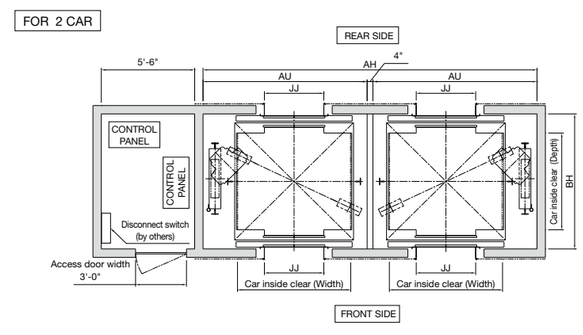

Shown for Center-Open doors

Hoistway Section

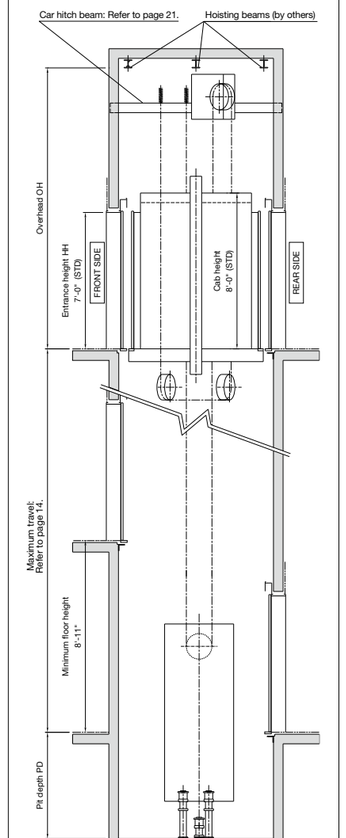

BASIC SPECIFICATIONS

For service CAPACITY: 4000lbs ~ 5000lbs

Capacity, Rated Speed, Door Type, Car Inside & Hoistway Dimensions*1

<Rated Speed 200FPM and 350FPM>

Configu-ration	Opening	Capacity (lbs)	Door type*2	CWT Location	Car inside clear dimensions Width (ft./in.)	Car inside clear dimensions Depth (ft./in.)	Entrance width JJ (ft./in.)	Minimum hoistway dimensions*3 AH: Width (ft./in.)*4,7	Minimum hoistway dimensions*3 BH: Depth (ft./in.)*7
Service	Front	4000	2S	Side	5'-8"	7'-3 1/4"	4'-0"	8'-7 1/2"	9'-1"
		4500				7'-11 1/4"			9'-8"
		5000				8'-6 1/4"			10'-3"
	Front & Rear	4500			5'-10"	8'-4 1/4"	4'-6"	8'-9 1/2"	10'-1"
		5000			5'-8"	8'-0"	4'-0"	8'-7 1/2"	10'-8 3/4"
						8'-7"			11'-3 3/4"
					5'-10"	8'-5"	4'-6"	8'-9 1/2"	11'-1 3/4"

<Rated Speed 200FPM and 350FPM>

Configu-ration	Opening	Capacity (lbs)	Minimum hoistway dimensions*3 Rated speed 200fpm PD (ft./in.)*5,7	200fpm OH*6 (ft./in.) Canopy height 8'-0"	200fpm OH*6 (ft./in.) Canopy height 9'-6"	350fpm PD (ft./in.)*5,7	350fpm OH*6 (ft./in.) Canopy height 8'-0"	350fpm OH*6 (ft./in.) Canopy height 9'-6"
Service	Front	4000	5'-8"	15'-1"	16'-6 11/16"	6'-1"	15'-5"	16'-10 11/16"
		4500						
		5000	6'-1"			6'-2"*8		
	Front & Rear	4500	5'-8"	15'-2"	16'-7 11/16"	6'-1"	15'-10"	17'-3 11/16"
		5000	6'-1"					

Notes
*1. The contents of these tables are standard specifications. They are based on ASME A17.1 and applicable to both seismic and non-seismic zones. Please consult your local sales office for other specifications. (Email: EEDSALES@meus.mea.com)
*2. 2S : 2-Speed side-open doors
*3. Hoistway dimensions (AH, BH, PD, OH) are for standard specifications.
*4. The AH dimensions indicate for one car. For AH dimensions of 2 and 3 car, please refer to left table. AU dimension in 2 and 3 car layout is same as AH of 1 car. These are values after waterproofing and do not include plumb tolerance.
*5. Pit depth in this drawing is obtained when floor recess is 3/4". When floor recess is greater than 3/4", extend pit depth as well. Max. floor recess is 1 1/4".
*6. The minimum OH dimensions are obtained on condition that:
A. Canopy height = 8'-0"
B. OH dimensions does not include the hoisting beams.
C. Please consult your structural engineer for hoisting beam size, but for please consider allowing 8" ~10" (6" ~ 8" beam + 2" gap).
*7. If occupied space below hoistway is provided, required hoistway dimensions will be changed. Please consult your local sales office for details.
*8. If the travel is below 98'-5", some reduction of pit depth is available. Please consult your local sales office for details.

Specifications

Rated speed	200fpm	350fpm
Maximum number of stops	24	
Maximum travel (ft.)	196'-10"	
Minimum floor height (ft.)	8'-11" *9	

For travel greater than shown above, please consult your local sales office or EEDSALES@meus.mea.com.

AH dimension for 2 and 3 Car

Configu-ration	Opening	Capacity (lbs)	Entrance width JJ (ft./in.)	AH dimension (ft./in.) 2 Car	AH dimension (ft./in.) 3 Car
Service	Front / Front & Rear	4000	4'-0"	17'-7"	26'-6 1/2"
		4500			
		5000			
		5000	4'-6"	17'-11"	27'-0 1/2"

Power Feeder Data for One Car*12

Rated speed (fpm)	Capacity (lbs)	Traction motor (HP)	Current at 480V*10 FLU (A)	Current at 480V*10 FLAcc (A)	Power supply capacity (kVA)	Heat emission (BTU/hr) Hoistway*11	Heat emission (BTU/hr) Control panel
200	4000	16.1	23	40	12	4270	4780
	4500	17.4	26	45	13	4610	5460
	5000	18.8	28	49	14	4950	5970
350	4000	26.8	39	69	19	5970	8360
	4500	29.5	43	77	22	6480	9220
	5000	33.5	48	85	24	7000	10240

Notes
*9. Some of specifications require more than the value 8'-11" as a minimum height. Please consult your local sales office if floor height is less than 8'-11".
*10. If power supply voltage is other than 480V, FLU and FLAcc current are obtained by the following formulas.
FLU, FLAcc current (A) at E = (Current at 480V) x (480/ E) (E: Power supply voltage (V))
*11. Heat emitted from car lighting is included.
*12. Start / hour (time) is as follows.
Rated speed 200fpm: 120 times
Rated speed 350fpm: 150 times

Profile
Design
Functions
Spec.
Info.

BASIC LAYOUTS

DIAMOND TRAC

For service CAPACITY: 4000lbs ~ 5000lbs

Front Opening

Hoistway Plan (example)

FOR 1 CAR

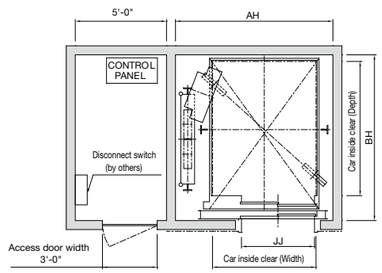

Shown for 2-Speed side-open doors

FOR 2 CAR

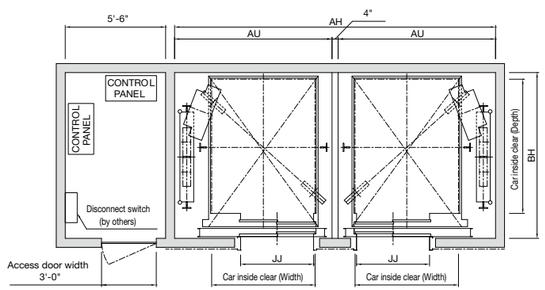

Shown for 2-Speed side-open doors

Hoistway Section

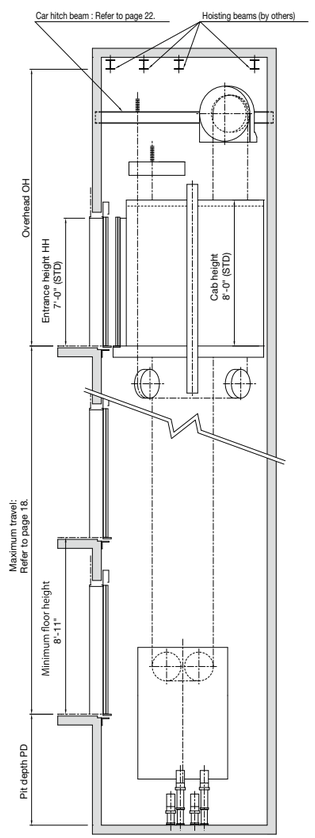

For service CAPACITY: 4500lbs ~ 5000lbs

Front & Rear Opening

Hoistway Plan (example)

FOR 1 CAR

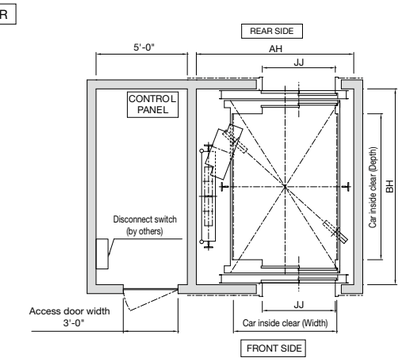

Shown for 2-Speed side-open doors

FOR 2 CAR

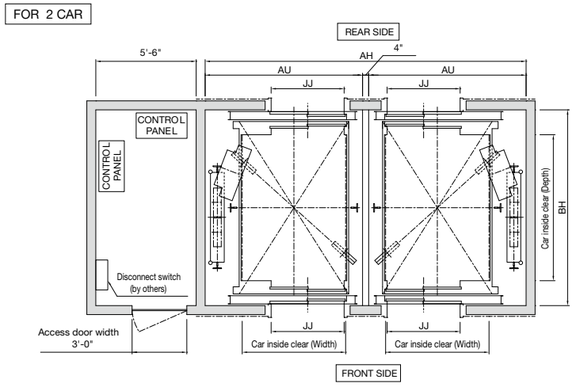

Shown for 2-Speed side-open doors

Hoistway Section

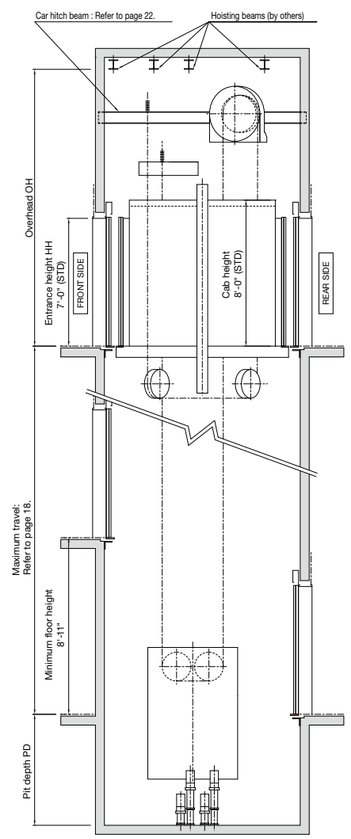

CAR HITCH BEAM

For passenger | CAPACITY: 2000lbs ~ 4000lbs

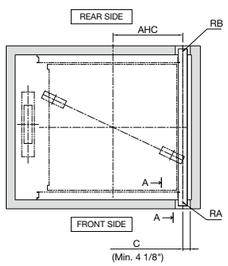

Hoistway plan

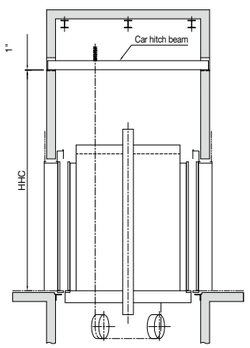

Hoistway section

Height of through hole for car hitch beam [HHC]*1

Rated speed (fpm)	HHC (ft./in.) Capacity 2000lbs~3500lbs	HHC (ft./in.) Capacity 4000lbs
200	11'-10 1/8"	12'-5 7/8"
350	12'-1 1/8"	12'-6 7/8"
400	12'-10 1/8"	-
500	13'-7 1/8"	

*1: The HHC dimensions are obtained when canopy height = 8'-0".

Reaction loads <Rated Speed 200FPM and 350FPM>

Opening	Capacity (lbs)	RA (lbs) Static	RA (lbs) Dynamic	RB (lbs) Static	RB (lbs) Dynamic
Front	2000	3200	6300	900	1800
	2500	3900	7500	1200	2300
	3000	4100	7900		
	3500	4500	8800		
Front & Rear	3500	3900	7700	1600	3000
Front	4000	5000	9900		3400

<Rated Speed 400FPM and 500FPM>

Opening	Capacity (lbs)	RA (lbs) Static	RA (lbs) Dynamic	RB (lbs) Static	RB (lbs) Dynamic
Front	2500	3900	7700	1200	2300
	3000	4300	8600		
	3500	4500	9300		
Front & Rear	3500	4100	7900	1600	3200

For Concrete and Masonry Wall Construction

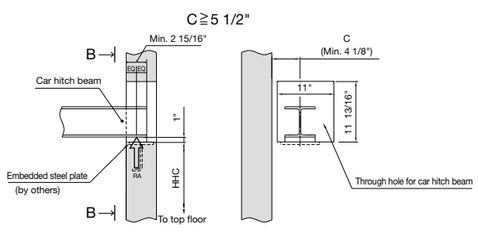

Section A-A Section B-B

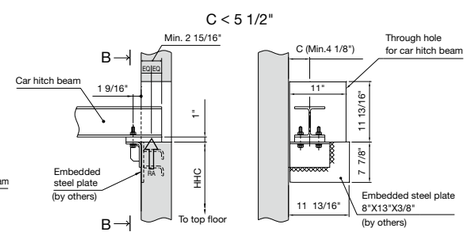

Section A-A Section B-B

For Dry Wall Construction

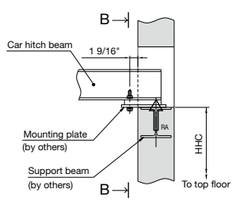

Section A-A

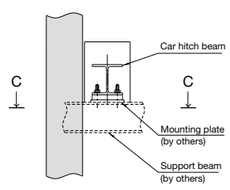

Section B-B

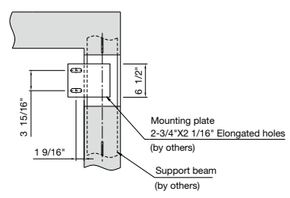

Section C-C

For service | CAPACITY: 4000lbs ~ 5000lbs

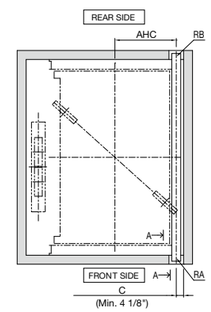

Hoistway plan

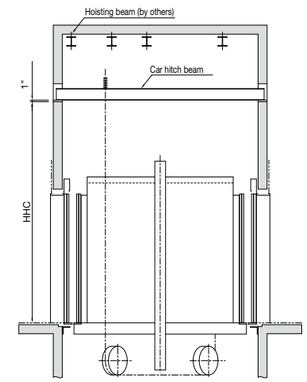

Hoistway section

Height of through hole for car hitch beam [HHC]*1

Rated speed (fpm)	HHC (ft./in.)
200	12'-5 7/8"
350	12'-6 7/8"

*1: The HHC dimensions are obtained on condition that:
A. Canopy height = 8'-0"
B. Travel ≦ 98'-5"

Reaction loads

Opening	Capacity (lbs)	CWT Location	RA (lbs) Static	RA (lbs) Dynamic	RB (lbs) Static	RB (lbs) Dynamic
Front	4000	Side	5000	9900	1600	3000
	4500		5200	10200	1400	2700
	5000		5900	11500	1800	3600
Front & Rear	4500		5000	9900	1600	3000
	5000		5900	11500	1800	3600

For Concrete and Masonry Wall Construction

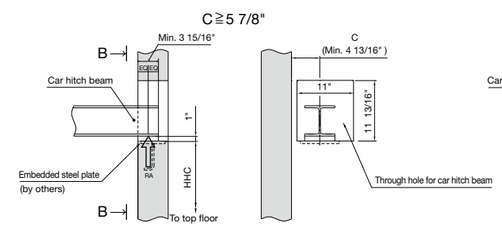

Section A-A Section B-B

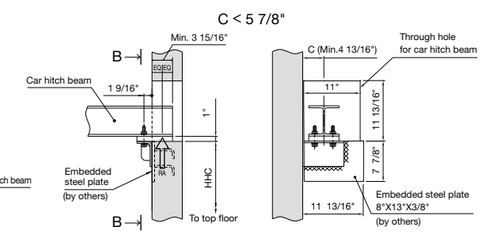

Section A-A Section B-B

For Dry Wall Construction

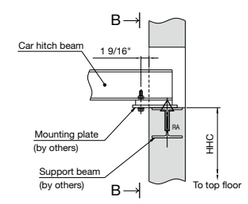

Section A-A

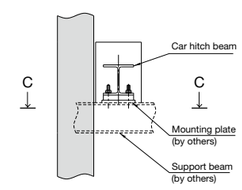

Section B-B

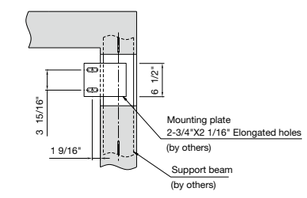

Section C-C

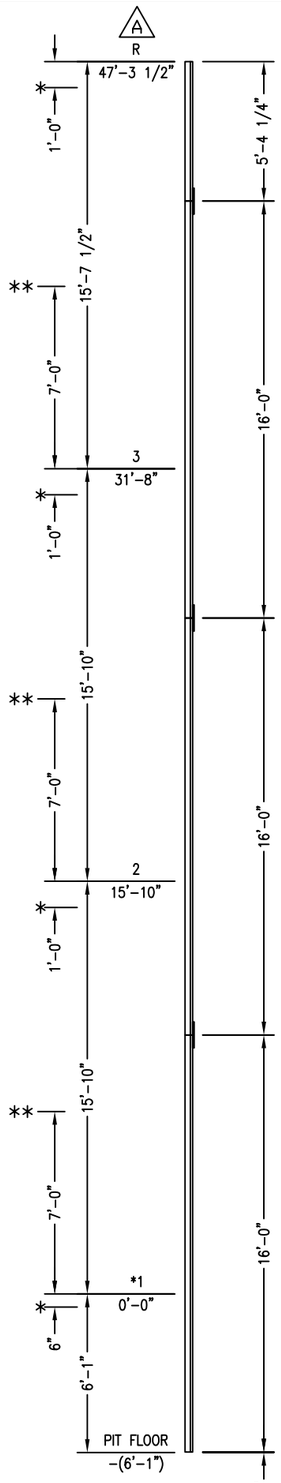

RAILSTACK

MAXIMUM BRACKET SPACING – 8'-4"
MAXIMUM PIT BRACKET SPACING – 10'-11"

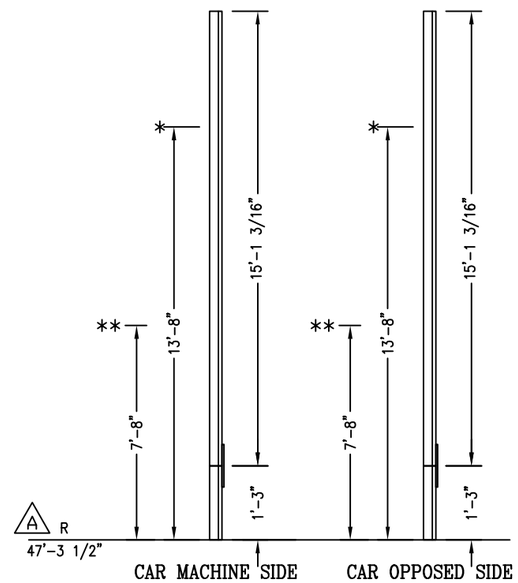

6448998-015,020 ELEVATOR #2, #1
GUIDERAIL DETAILS
CAR SIDE

RAIL SIZE (Lb/ft)	CAR RAIL SCHEDULE		
	LOCATION	RAIL LENGTH	QTY
CAR 15	CAR FILLER RAIL	6'-7 1/4"	1
	MIDDLE	16'-0"	2
	STARTER	16'-0"	1

CWT SIDE

RAIL SIZE (Lb/ft)	CWT RAIL SCHEDULE		
	LOCATION	RAIL LENGTH	QTY
CWT 15	CWT FILLER RAIL	14'-2 7/8"	1
	MIDDLE	16'-0"	2
	STARTER	16'-0"	1

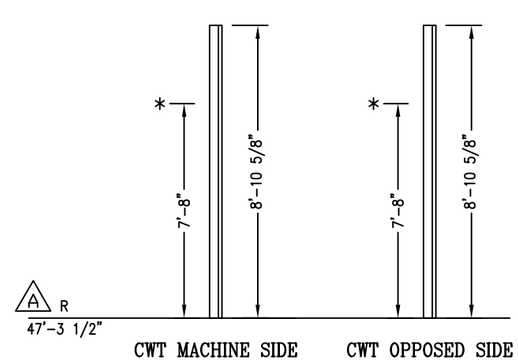

"*" DENOTES CENTER LINE OF BRACKETS.
BRACKET SUPPORTS ARE REQUIRED AT THESE POINTS.

"**" DENOTES CENTER LINE OF INTERMEDIATE BRACKETS.
BRACKET SUPPORTS ARE REQUIRED AT THESE POINTS.

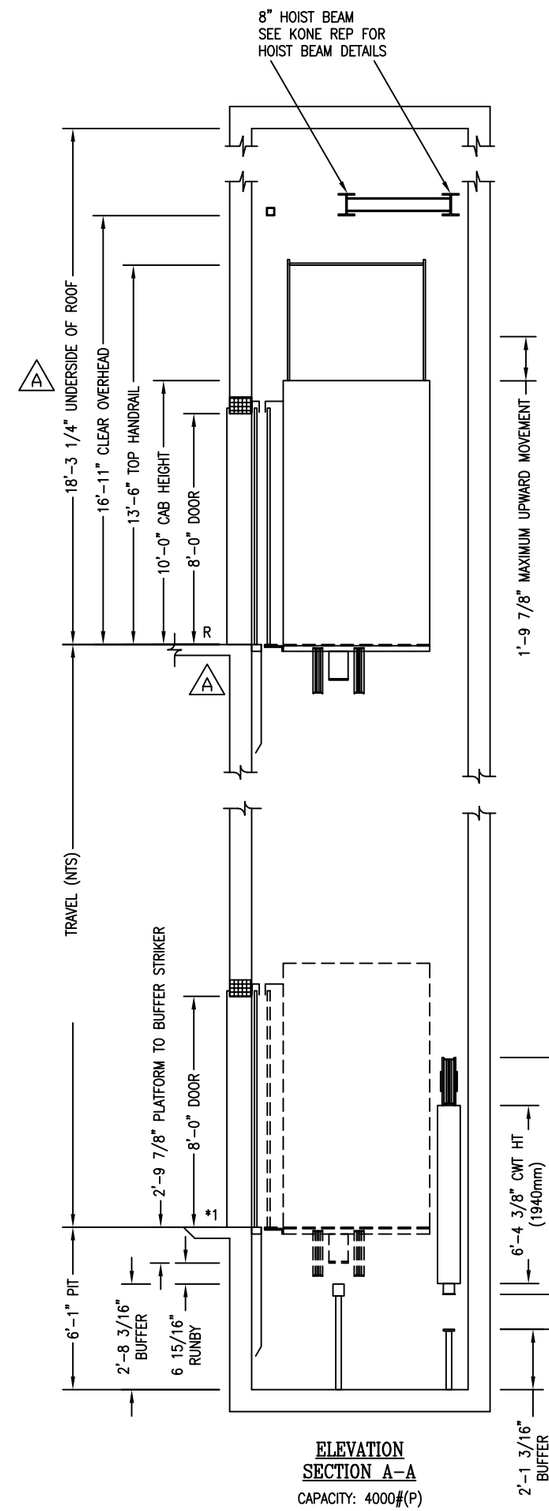

ELEVATION SECTION A–A

CAPACITY: 4000#(P)

FLOOR NUM	FRONT	REAR	DISTANCE
1	*1		15'-10"
2	2		15'-10"
3	3		15'-7 1/2"
4	R		

B

1. NO CHANGES MADE

A

1. FLOOR MARK UPDATED
2. UNDERSIDE OF ROOF UPDATED

REFER SHEET 4 FOR BRACKET TABLE DETAILS

ELEVATIONS OR FLOOR MARKINGS OF THE FOLLOWING MUST BE NOTED WHEN APPLICABLE.

DESIGNATION	FLOOR MARKING
MAIN ELEVATION LOBBY	*1
FIRE SERVICE RETURN	*1
ALTERNATE FIRE SERVICE RETURN	2
EMERGENCY POWER RETURN	*1

APPROVED BY

APPROVAL SPACE

PROJECT:
ELEVATOR #2, #1
LOCATION:

ENG/ARCH:

CONTRACTOR:
DEL AMO CONSTRUCTION

UNIT INFO			
020	6448998		43281653
015	6448998		43281652
ITEM NO.	UNIT NO.		EQUIPMENT NO.

REVISIONS				
03/23/18	B	KAR	PRN	REVISED PRELIMINARY
03/07/18	A	SRS	MER	REVISED PRELIMINARY
12/26/17	–	SRS	PRN	PRELIMINARY
DATE	NO	BY	CK	DESCRIPTION

THIS INFORMATION IS CONFIDENTIAL AND REMAINS THE PROPERTY OF KONE INC. ITS USE, REPRODUCTION OR DISSEMINATION WITHOUT THE EXPRESS PERMISSION OF KONE INC. IS STRICTLY PROHIBITED.

KONE

GENERATED ON: 12/26/17	BY: SRS	REV B
UNITS: INCHES	EXB 65.7	
DRAWING 6448998-010-M	DESCRIPTION RAILSTACK	SHEET 3

COMMON REMOTE CONTROL ROOM LOCATED
(APPROX.) 31'-5 1/2" BELOW TOP LANDING
(FLOOR MARK 2)

15'-10"

6448998-015 ELEVATOR #2 IS SHOWN
6448998-020, ELEVATOR #1 IS OPPOSITE

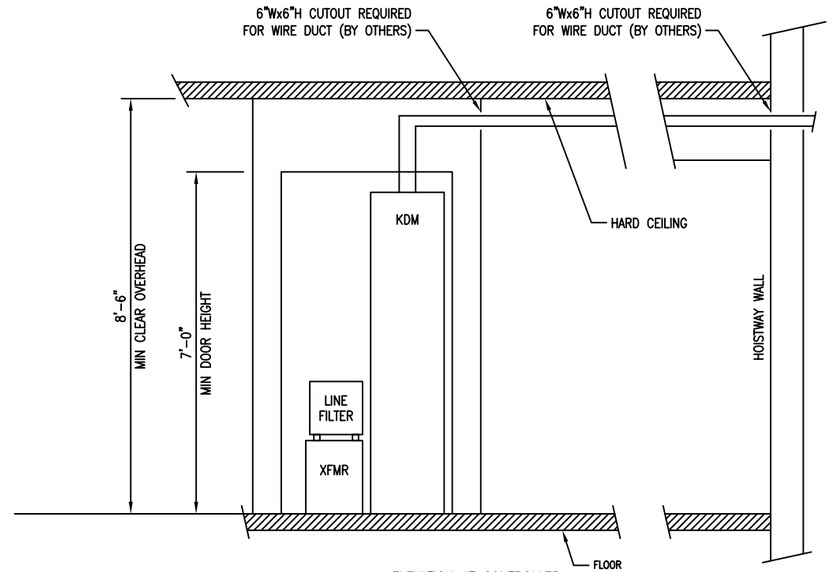

ELEVATION AT CONTROLLER

B

1. HOISTWAY WIDTH UPDATED

A

1. UNDERSIDE OF ROOF UPDATED
2. HOISTWAY DIMENSION UPDATED

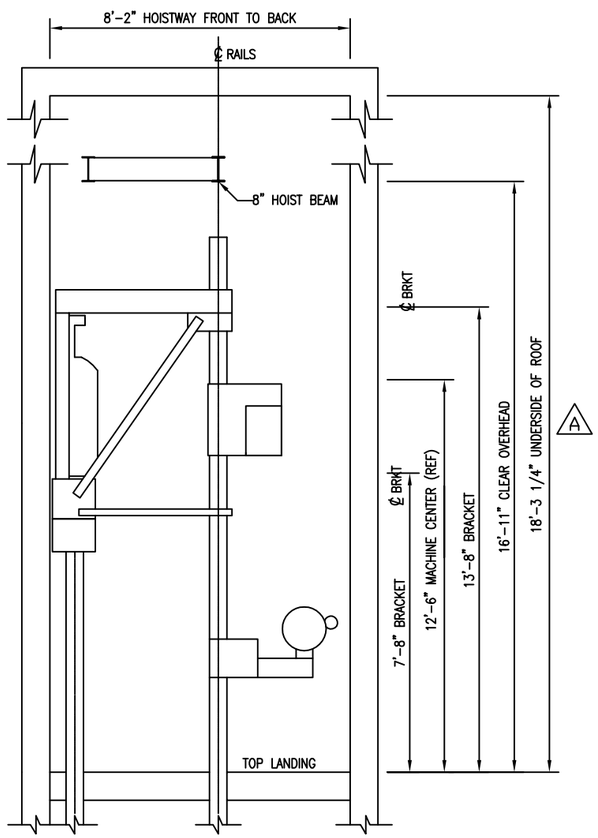

ELEVATION VIEW FROM HOISTWAY
LOOKING FROM OUTSIDE
(LEFT SIDE VIEW)

B A

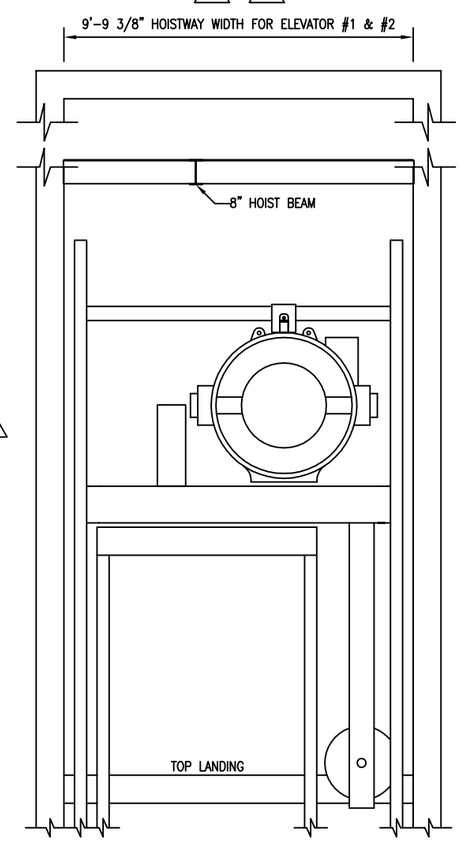

ELEVATION VIEW FROM HOISTWAY
LOOKING @ MACHINE SIDE

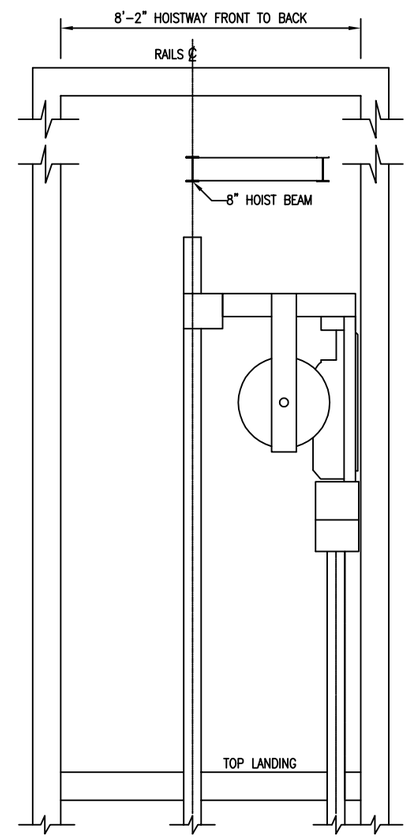

ELEVATION VIEW FROM HOISTWAY
LOOKING FROM OUTSIDE
(RIGHT SIDE VIEW)

FIELD NOTE: THESE UNITS REQUIRE EBR OPTION

APPROVED BY

APPROVAL SPACE

PROJECT:
ELEVATOR #2, #1
LOCATION:

ENG/ARCH:

CONTRACTOR:
DEL AMO CONSTRUCTION

UNIT INFO		
020	6448998	43281653
015	6448998	43281652
ITEM NO.	UNIT NO.	EQUIPMENT NO.

REVISIONS				
03/23/18	B	KAR	PRN	REVISED PRELIMINARY
03/07/18	A	SRS	MER	REVISED PRELIMINARY
12/26/17	–	SRS	PRN	PRELIMINARY
DATE	NO	BY	CK	DESCRIPTION

THIS INFORMATION IS CONFIDENTIAL AND REMAINS THE PROPERTY OF KONE INC. ITS USE, REPRODUCTION OR DISSEMINATION WITHOUT THE EXPRESS PERMISSION OF KONE INC. IS STRICTLY PROHIBITED.

KONE

GENERATED ON: 12/26/17	BY: SRS	REV B
UNITS: INCHES	EXB 65.7	
DRAWING 6448998-010-M	DESCRIPTION CONTROLLER	SHEET 5

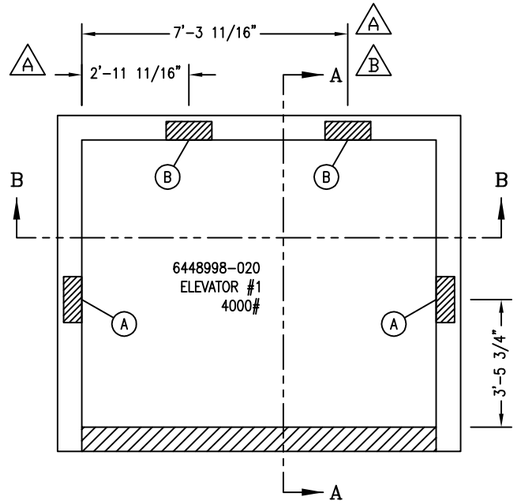

BRACKET ATTACHMENT LOCATIONS

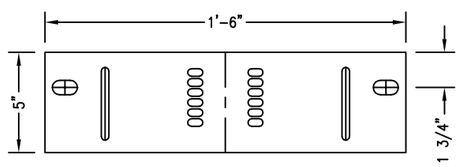

STEEL

KONE SUPPLIED BRACKET FOOTPRINT AT POINT A (CAR BRACKETS)

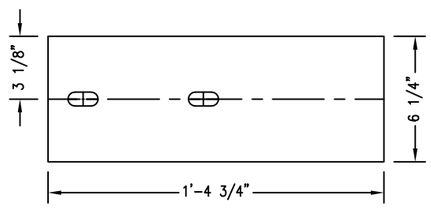

STEEL

KONE SUPPLIED BRACKET FOOTPRINT AT POINT B (CWT BRACKETS)

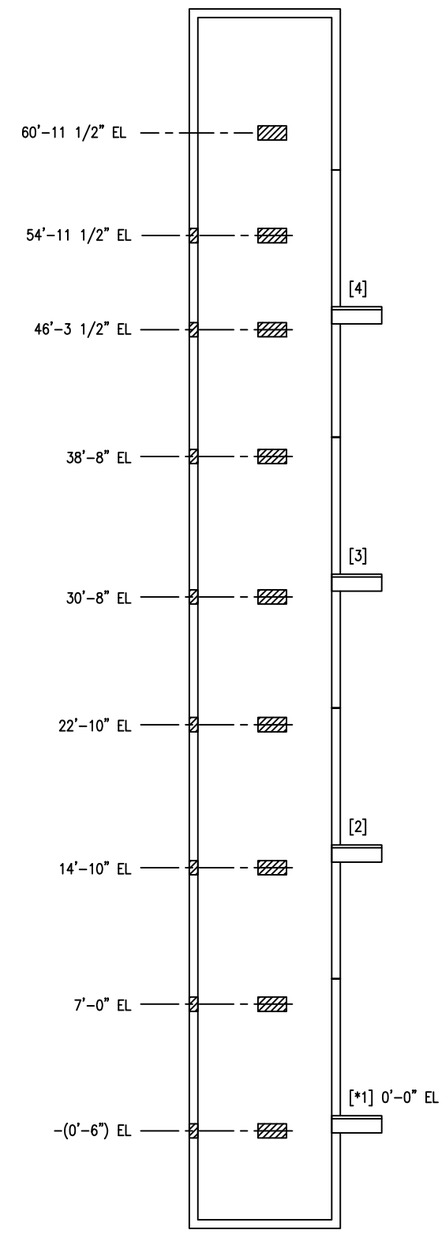

SECTION A-A

BRACKET ELEVATIONS ARE AT THE CENTERLINE OF BEARING AREA OF WALL FASTENERS

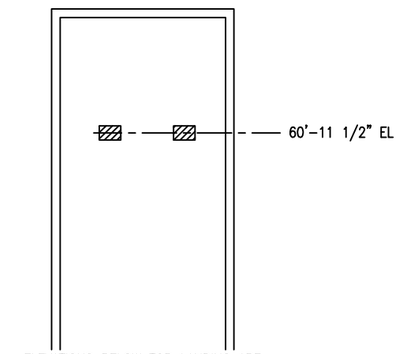

ELEVATIONS BELOW TOP LANDING ARE THE SAME AS SECTION A-A

SECTION B-B

BRACKET ELEVATIONS ARE AT THE CENTERLINE OF BEARING AREA OF WALL FASTENERS

A 1. BRACKET LOCATION UPDATED

B 1. BRACKET LOCATION UPDATED

APPROVED BY

APPROVAL SPACE

PROJECT:
ELEVATOR #1
LOCATION:

ENG/ARCH:

CONTRACTOR:
DEL AMO CONSTRUCTION

UNIT INFO		
020	6448998	43281653
ITEM NO.	UNIT NO.	EQUIPMENT NO.

REVISIONS				
03/23/18	B	KAR	PRN	REVISED PRELIMINARY
03/07/18	A	SRS	MER	REVISED PRELIMINARY
12/26/17	–	SRS	PRN	PRELIMINARY
DATE	NO	BY	CK	DESCRIPTION

THIS INFORMATION IS CONFIDENTIAL AND REMAINS THE PROPERTY OF KONE INC. ITS USE, REPRODUCTION OR DISSEMINATION WITHOUT THE EXPRESS PERMISSION OF KONE INC. IS STRICTLY PROHIBITED.

KONE

GENERATED ON: 12/26/17	BY: SRS	REV B
UNITS: INCHES	EXB 65.7	
DRAWING 6448998-010-M	DESCRIPTION BRACKET	SHEET 8

FLOOR NUM	FRONT	REAR	DISTANCE
1	*1	1R	15'-10"
2	2		15'-10"
3	3		15'-7 1/2"
4	R		

6448998-030 ELEVATOR #3 (A) (B) (A)

BRACKET CHART (NOT INCLUDING CWT TIE BRACKETS)

BRACKET VERTICAL LOCATION	CAR BRACKET BRACKET HEIGHT	CAR BRACKET BRACKET SUPPORT TYPE	CWT BRACKET BRACKET HEIGHT	CWT BRACKET BRACKET SUPPORT TYPE	COMBO BRACKET BRACKET HEIGHT	COMBO BRACKET BRACKET SUPPORT TYPE
OVERHEAD	9 1/2"	10" VER.T. STEEL	11 3/4"	10" VER.T. STEEL	16"	10" VER.T. STEEL
OVERHEAD	9 1/2"	10" VER.T. STEEL	11 3/4"	10" VER.T. STEEL	16"	10" VER.T. STEEL
R	12 1/16"	12 1/2" I-BEAM	11 3/4"	10" VER.T. STEEL	16"	12" VER.T. STEEL
INT	9 1/2"	10" VER.T. STEEL	11 3/4"	10" VER.T. STEEL	16"	12" VER.T. STEEL
3	12 1/16"	12 1/2" I-BEAM	11 3/4"	10" VER.T. STEEL	16"	12" VER.T. STEEL
INT	9 1/2"	10" VER.T. STEEL	11 3/4"	10" VER.T. STEEL	16"	12" VER.T. STEEL
2	12 5/16"	6" I-BEAM	11 3/4"	10" VER.T. STEEL	16"	12" VER.T. STEEL
INT	9 1/2"	10" VER.T. STEEL	11 3/4"	10" VER.T. STEEL	16"	12" VER.T. STEEL
*1/1R	9 1/2"	6" HSS BEAM	11 3/4"	10" VER.T. STEEL	16"	12" VER.T. STEEL

(A)

1.BRACKET TABLE UPDATED
2.FLOOR MARK UPDATED

(B)

1.BRACKET TABLE UPDATED

MAXIMUM CAR BRACKET SPACING: 9'-11"

MAXIMUM CWT BRACKET SPACING:
WITH 0 TIE BRACKET: 7'-1"
WITH 1 TIE BRACKET : 9'-7"
WITH 2 TIE BRACKET: 10'-4"

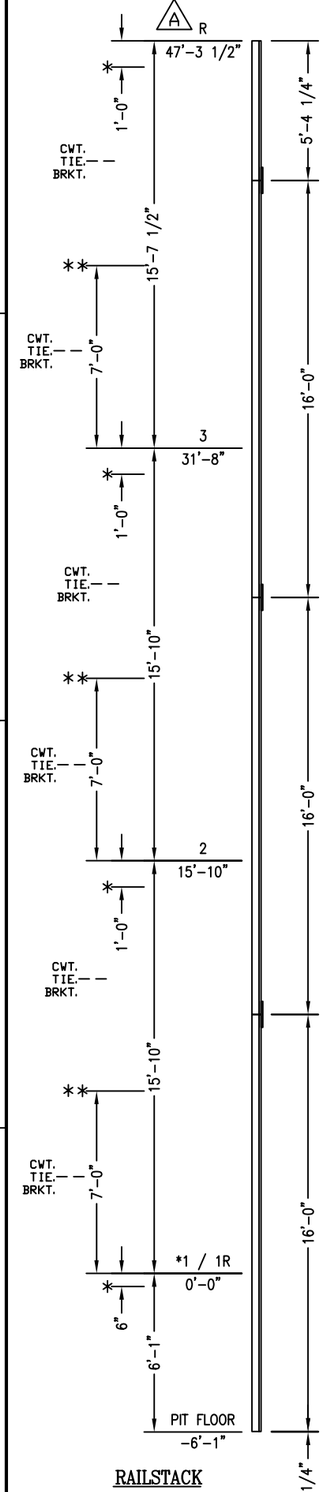

RAILSTACK

6448998-030 ELEVATOR #3

CWT TIE BRACKETS	
CWT B.B OF RAILS	QTY:
3'-3 5/16"	7

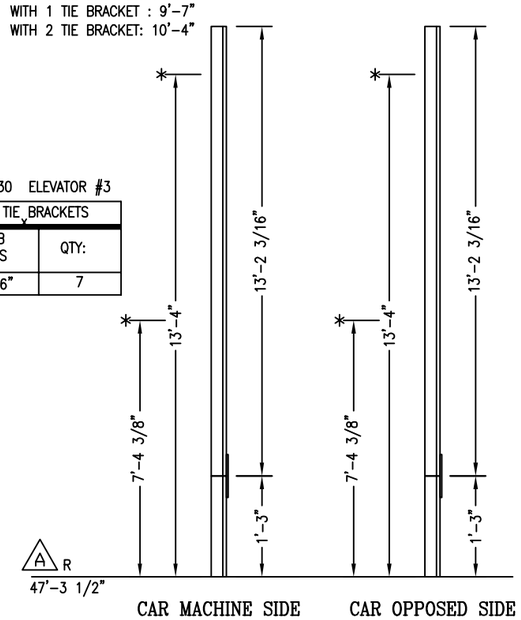

CAR MACHINE SIDE CAR OPPOSED SIDE

6448998-030 ELEVATOR #3

GUIDE RAIL DETAILS
MACHINE SIDE

GUIDE RAIL SIZE (lb/ft)	RAIL SCHEDULE LOCATION	RAIL LENGTH	QTY
CAR 18	FILLER RAIL	6'-7 1/4"	1
	MIDDLE	16'-0"	2
CWT 15	STARTER	16'-0"	1

OTHER SIDE

GUIDE RAIL SIZE (lb/ft)	RAIL SCHEDULE LOCATION	RAIL LENGTH	QTY
CAR 18	FILLER RAIL	6'-7 1/4"	1
	MIDDLE	16'-0"	2
CWT 15	STARTER	16'-0"	1

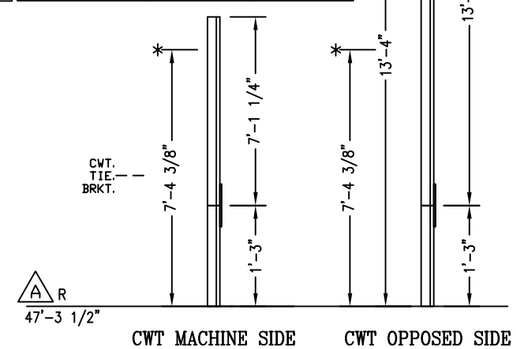

CWT MACHINE SIDE CWT OPPOSED SIDE

"*" DENOTES CENTER LINE OF BRACKETS.
BRACKET SUPPORTS ARE REQUIRED AT THESE POINTS.

"**" DENOTES INTERMEDIATE BRACKETS.
SUPPORT BY OTHERS

CWT TIE DO NOT ATTACH TO THE BUILDING STRUCTURE

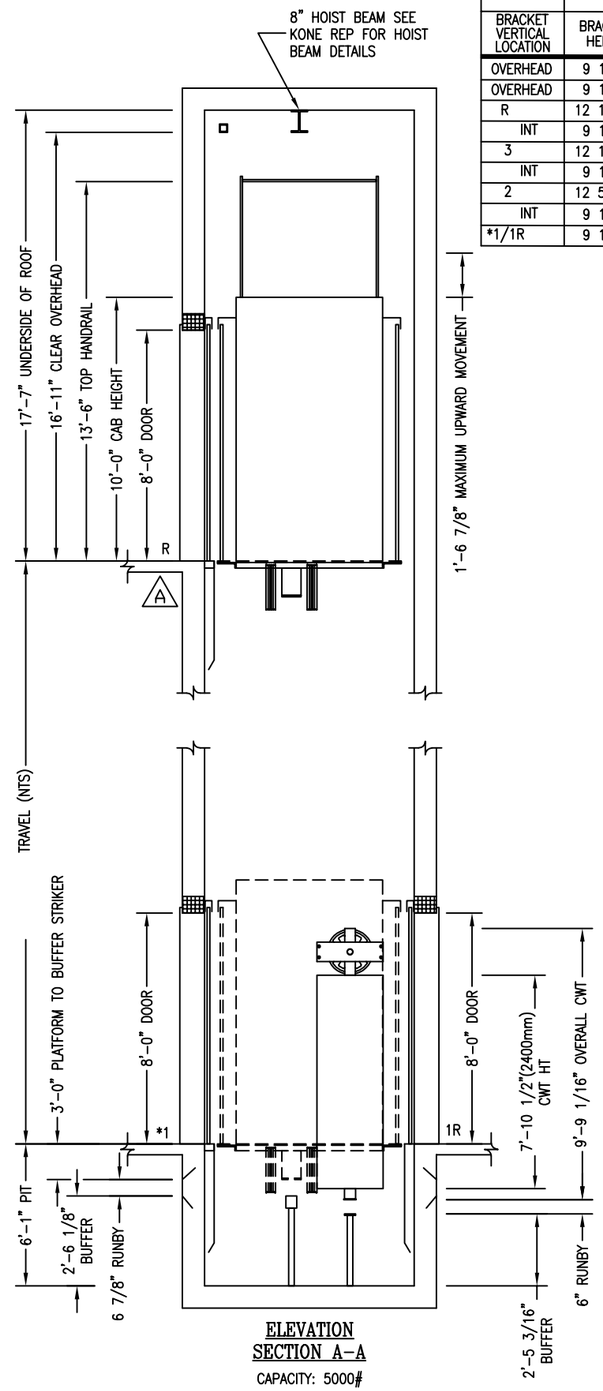

ELEVATION
SECTION A-A
CAPACITY: 5000#

ELEVATIONS OR FLOOR MARKINGS OF THE FOLLOWING MUST BE NOTED WHEN APPLICABLE.

DESIGNATION	FLOOR MARKING
MAIN ELEVATION LOBBY	*1
FIRE SERVICE RETURN	*1
ALTERNATE FIRE SERVICE RETURN	2
EMERGENCY POWER RETURN	*1

APPROVED BY

APPROVAL SPACE

PROJECT:
ELEVATOR #3
LOCATION:

ENG/ARCH:

CONTRACTOR:
DEL AMO CONSTRUCTION

UNIT INFO			
030	6448998	43281654
ITEM NO.	UNIT NO.	EQUIPMENT NO.

REVISIONS DATE	NO	BY	CK	DESCRIPTION
03/26/18	B	KAR	MER	REVISED PRELIMINARY
03/08/18	A	KAR	MER	REVISED PRELIMINARY
12/26/17	–	PRN	MER	PRELIMINARY

THIS INFORMATION IS CONFIDENTIAL AND REMAINS THE PROPERTY OF KONE INC. ITS USE, REPRODUCTION OR DISSEMINATION WITHOUT THE EXPRESS PERMISSION OF KONE INC. IS STRICTLY PROHIBITED.

KONE

GENERATED ON: 12/26/17	BY: PRN	REV B
UNITS: INCHES	EXB 65.7	
DRAWING 6448998-025-M	DESCRIPTION RAILSTACK	SHEET 3

COMMON REMOTE CONTROL ROOM LOCATED
(APPROX.) 31'-5 1/2" BELOW TOP LANDING
(FLOOR MARK 2)

15'-10"

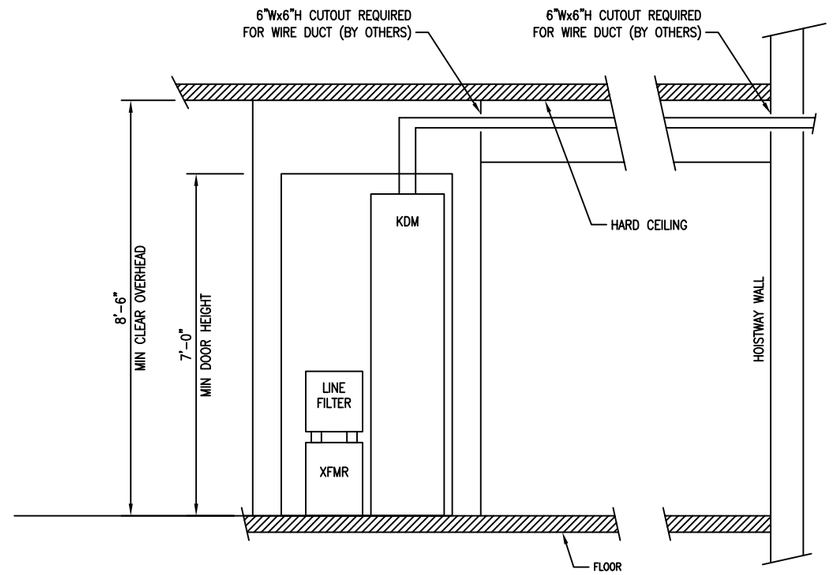

ELEVATION AT CONTROLLER

6448998-030 ELEVATOR #3

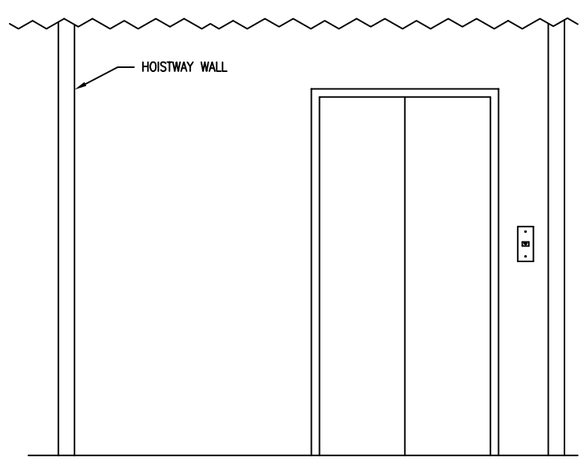

ELEVATION AT TOP LANDING (FRONT)

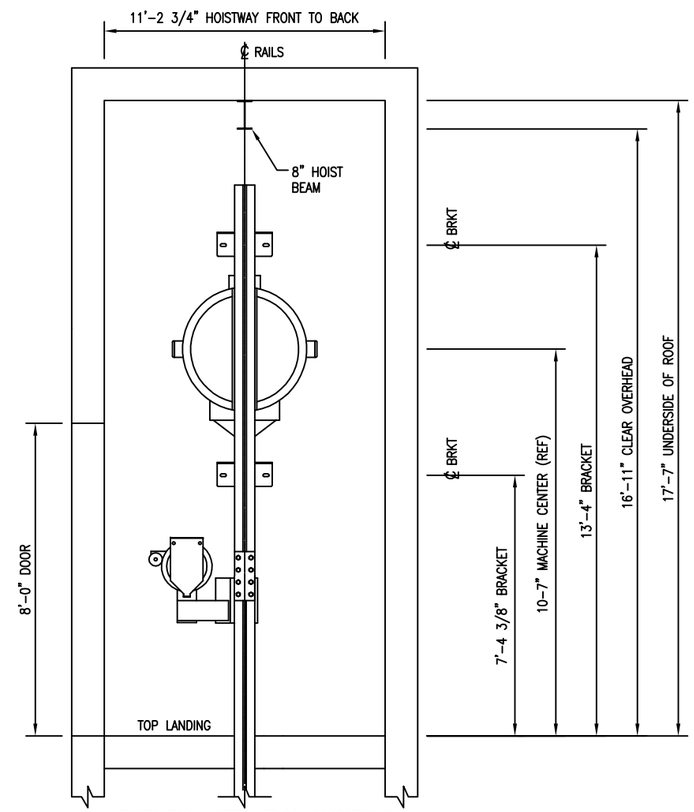

ELEVATION VIEW FROM HOISTWAY
LOOKING @ THE MACHINE
SECTION A-A

A 1.NO CHANGES MADE

B NO CHANGES MADE

FIELD NOTE: THIS UNIT REQUIRES EBR OPTION

APPROVED BY

APPROVAL SPACE

PROJECT:
ELEVATOR #3
LOCATION:

ENG/ARCH:

CONTRACTOR:
DEL AMO CONSTRUCTION

UNIT INFO		
030	6448998	43281654
ITEM NO.	UNIT NO.	EQUIPMENT NO.

REVISIONS				
03/26/18	B	KAR	MER	REVISED PRELIMINARY
03/08/18	A	KAR	MER	REVISED PRELIMINARY
12/26/17	–	PRN	MER	PRELIMINARY
DATE	NO	BY	CK	DESCRIPTION

THIS INFORMATION IS CONFIDENTIAL AND REMAINS THE PROPERTY OF KONE INC. ITS USE, REPRODUCTION OR DISSEMINATION WITHOUT THE EXPRESS PERMISSION OF KONE INC. IS STRICTLY PROHIBITED.

KONE

GENERATED ON: 12/26/17	BY: PRN	REV B
UNITS: INCHES	EXB 65.7	
DRAWING 6448998-025-M	DESCRIPTION CONTROLLER	SHEET 4

LANDINGS	FRONT MARKING	FLOOR HEIGHT

RAIL FORCE & BRACKET SPACING DETAIL

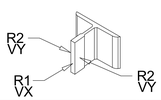

CAR	R1 (LBS.)	508
	R2 (LBS.)	177
	VX (LBS.)	2672
	VY (LBS.)	1336
	MAXIMUM BRACKET SPACING	13'-7"
	RAIL SIZE	#1
CWT	R1 (LBS.)	259
	R2 (LBS.)	28
	VX (LBS.)	2791
	VY (LBS.)	1395
	MAXIMUM BRACKET SPACING	13'-7"
	RAIL SIZE	#1-1/2

CAR R1 = SAFETY APPLICATION
CWT R1 = SAFETY APPLICATION
R2 = LOADING OR RUNNING

REQUIREMENTS FOR RAIL BRACKET SUPPORT (NOT BY OTIS):
DEFLECTION NOT TO EXCEED 1/8"
BASED ON HORIZONTAL RAIL FORCES.

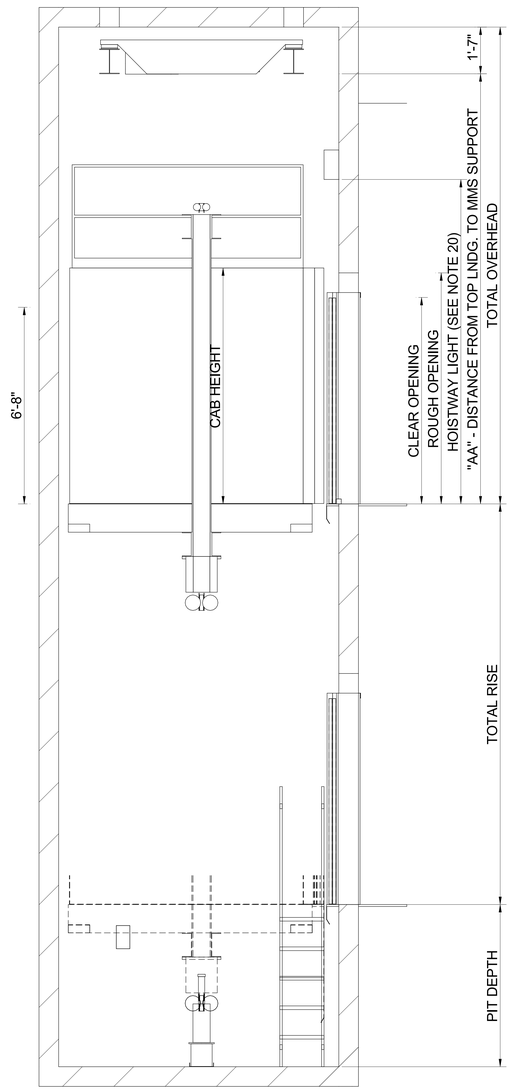

SECTIONAL ELEVATION

FOR MAX. SPACING BETWEEN INSERTS SEE RAIL FORCE DETAIL

* COUNTERWEIGHT SAFTIES ARE REQUIRED WHEN OCCUPPIED SPACE EXISTS BELOW THE PIT, PER ASME A17.1 SECTION 2.6.

	CAB HEIGHT	
	8'-0"	9'-7"
MIN. "PIT DEPTH"	5'-6"	
MAX. "PIT DEPTH"	15'-6"	
MIN. "TOTAL OVERHEAD"	16'-2"	17'-9"
MIN. "AA"	14'-7"	16'-2"
MAX. "AA"	14'-10"	16'-5"
MIN. "TOTAL RISE"	20'-0"	
MAX. "TOTAL RISE"	302'-0"	

STANDARD WORKING RANGES

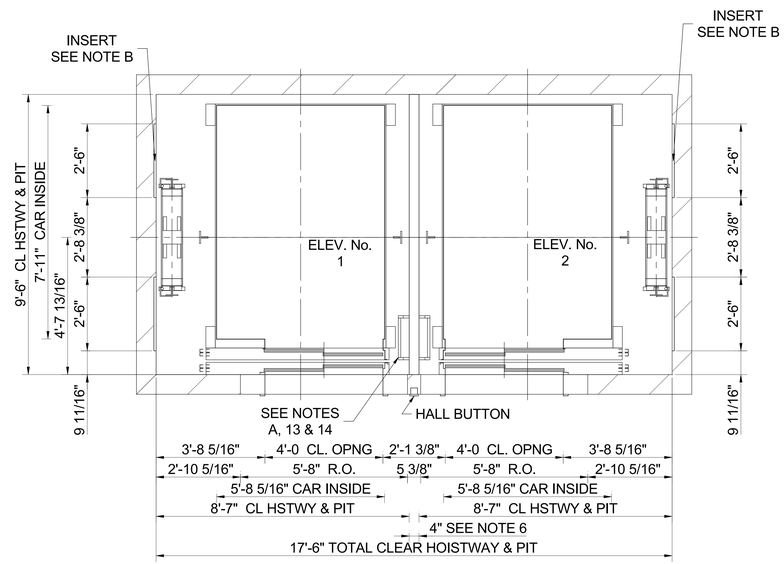

PLAN VIEW

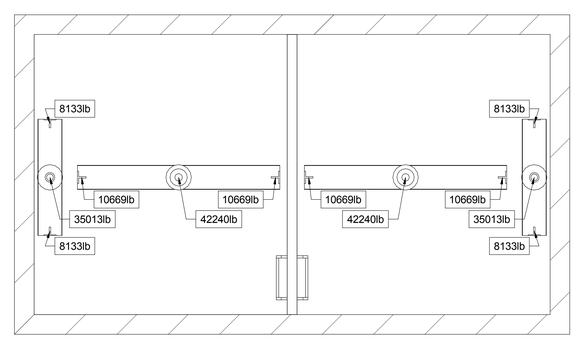

PIT PLAN VIEW

FORCE SHOWN INCLUDES DOUBLING FOR IMPACT (SEE NOTE 11)

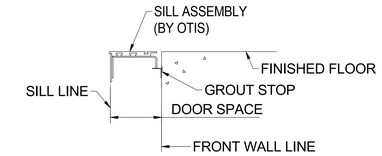

SEE NOTE 7

DETAIL "A"
SILL SUPPORT

ADEQUATE SUPPORT AT ALL FASTENING POINTS OF ENTRANCE ASSEMBLY REQUIRED. MUST WITHSTAND A HORIZONTAL PULL-OUT FORCE OF 140 LBS. @ EA. FASTENING POINT (8 @ EA. ENTRANCE) INCLUDING SUPPORT FOR CENTER SILL SUPPORT BRACKET (NOT BY OTIS).

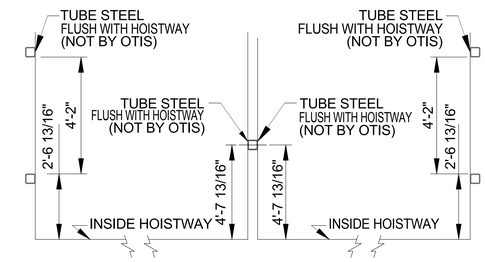

NOTE A
IF CUTOUT REQUIRED FOR PIT LADDER,
23" (WIDTH) X 2-1/2"(DEPTH) X PIT DEPTH + 4'-0"
OTIS REPRESENTATIVE TO CONFIRM YOUR SPECIFIC LOCATION.

NOTE B
THESE DIMENSIONS ARE BASED ON HOISTWAY SIZES SHOWN & 30" INSERTS. IF EITHER OF THESE VARY, CONSULT THE SALES REPRESENTATIVE.

NOTE C
HOISTWAY LIGHT SWITCH (LOCATED 3'-0" ABOVE TOP LANDING) COORDINATE LOCATION WITH OTIS.

APPROVAL
THIS ARRANGEMENT AND SUPPLEMENTARY NOTES APPROVED

SIGNED: _____ DATE: _____

THIS WORK AND THE INFORMATION IT CONTAINS ARE THE PROPERTY OF OTIS ELEVATOR COMPANY ("OTIS"). IT IS DELIVERED TO OTHERS ON THE EXPRESS CONDITION THAT IT WILL BE USED ONLY FOR OR ON BEHALF OF OTIS; THAT NEITHER IT NOR THE INFORMATION IT CONTAINS WILL BE REPRODUCED OR DISCLOSED. IN WHOLE OR IN PART, WITHOUT THE WRITTEN CONSENT OF OTIS; AND THAT ON DEMAND IT AND ANY COPIES WILL BE PROMPTLY RETURNED TO OTIS.

UNPUBLISHED WORK © OTIS ELEVATOR COMPANY 2004
ALL RIGHTS RESERVED.

Gen2®

4500 #
350 F.P.M

CAB TYPE = VENERCB
SEISMIC = ZONE4

COUNTER WEIGHT SAFTEY = Y
GLASS BACK CAR = N

Otis
A United Technologies Company

REVISION DATE:	SHEET 2 OF 3
DWG. NO.: GEN4535H-PN	
BUILDING	
LOCATION ,	
CONT. WITH	
OWNER	
ARCHT.	
CONTRACT NO.	

NOTE - DO NOT SCALE THIS DRAWING

REFER TO DWG'S. NO. GEN4535H-PWBO, -MR, -EL

EXPRESS DRAW: 9999

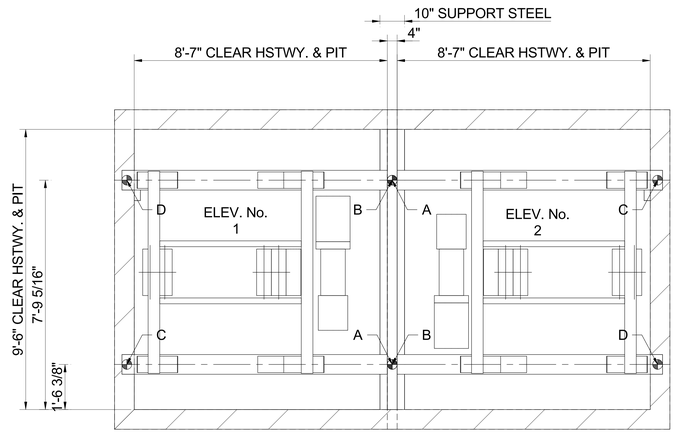

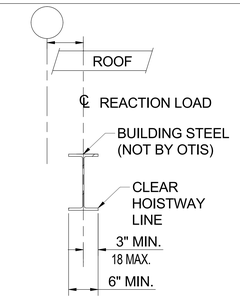

LEFT STEEL SUPPORT

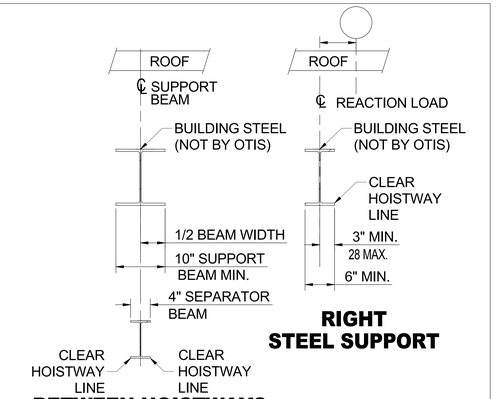

BETWEEN HOISTWAYS STEEL SUPPORT

RIGHT STEEL SUPPORT

PLEASE PROVIDE AND VERIFY COLUMN LINE REFERENCE AND DISTANCE FROM COLUMN LINE TO ℄ OF STEEL SUPPORT

SIGNED: _____ DATE: _____

BUILDING REACTIONS

	KIPS	
	STATIC	DYNAMIC
A	3.99	7.53
B	3.95	7.39
C	7.15	13.29
D	7.09	13.07
MACH. BEAM SIZE	W10X45 x 112"LG	

DESIGN CRITERIA FOR BUILDING IMMEDIATE SUPPORTS

1. STATIC CONDITION: $\Delta_{ALLOW.} = \frac{SPAN}{1666}$

2. DYNAMIC CONDITION: STRESS $_{ALLOW.}$ = 80% OF THE PERMITTED STRESSES FOR STATIC LOADS.

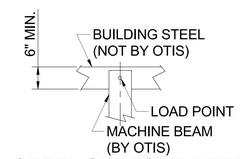

STEEL SUPPORT DETAIL

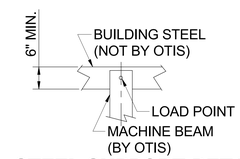

STEEL SUPPORT DETAIL

MACHINE MOUNTING STRUCTURE (MMS)

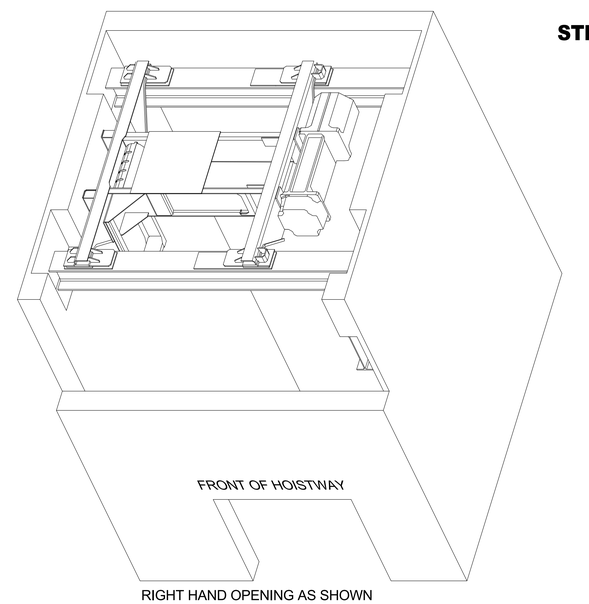

RIGHT HAND OPENING AS SHOWN
CENTER AND LEFT HAND OPENING OPPOSITE

MACHINE MOUNTING STRUCTURE (MMS)	
MACHINE LENGTH	7'-2 3/4"
MACHINE WIDTH	6'-10 3/16"
MACHINE HEIGHT	1'-5 3/8"

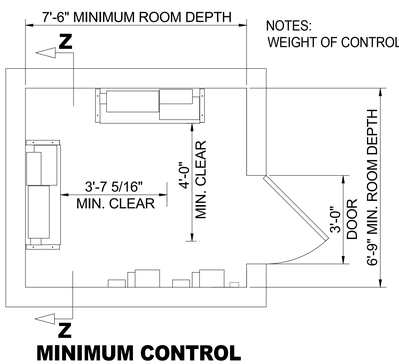

NOTES:
WEIGHT OF CONTROLLER = 350 lbs.

MINIMUM CONTROL ROOM REQUIREMENTS TWO CAR

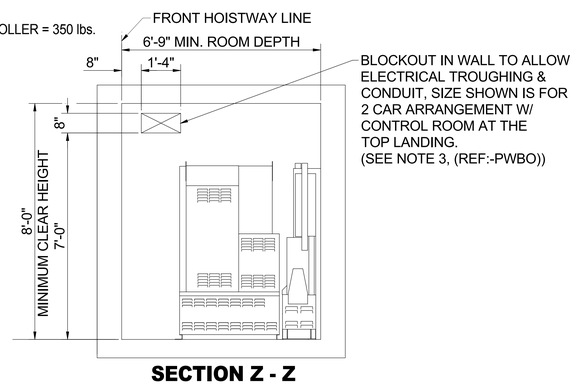

SECTION Z - Z

APPROVAL
THIS ARRANGEMENT AND SUPPLEMENTARY NOTES APPROVED

SIGNED: _____ DATE: _____

THIS WORK AND THE INFORMATION IT CONTAINS ARE THE PROPERTY OF OTIS ELEVATOR COMPANY ("OTIS"). IT IS DELIVERED TO OTHERS ON THE EXPRESS CONDITION THAT IT WILL BE USED ONLY FOR OR ON BEHALF OF OTIS; THAT NEITHER IT NOR THE INFORMATION IT CONTAINS WILL BE REPRODUCED OR DISCLOSED. IN WHOLE OR IN PART, WITHOUT THE WRITTEN CONSENT OF OTIS; AND THAT ON DEMAND IT AND ANY COPIES WILL BE PROMPTLY RETURNED TO OTIS.

UNPUBLISHED WORK © OTIS ELEVATOR COMPANY 2004
ALL RIGHTS RESERVED.

Gen2®

4500 #
350 F.P.M

CAB TYPE = VENERCB
SEISMIC = ZONE4

COUNTER WEIGHT SAFTEY = Y
GLASS BACK CAR = N

Otis
A United Technologies Company

REVISION DATE:	SHEET 3 OF 3
DWG. NO.: GEN4535H-EL	
BUILDING	
LOCATION ,	
CONT. WITH	
OWNER	
ARCHT.	
CONTRACT NO.	

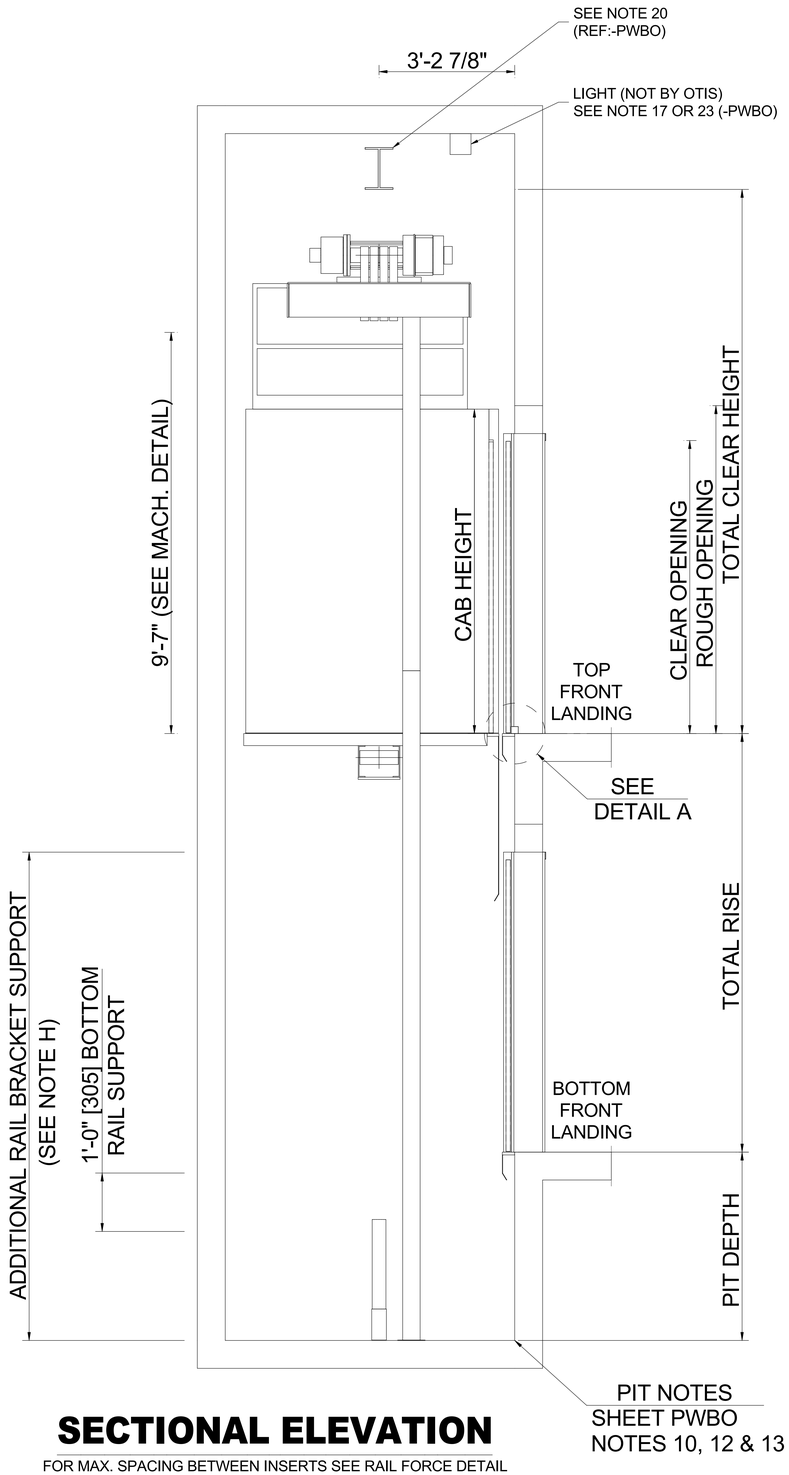

SECTIONAL ELEVATION

FOR MAX. SPACING BETWEEN INSERTS SEE RAIL FORCE DETAIL

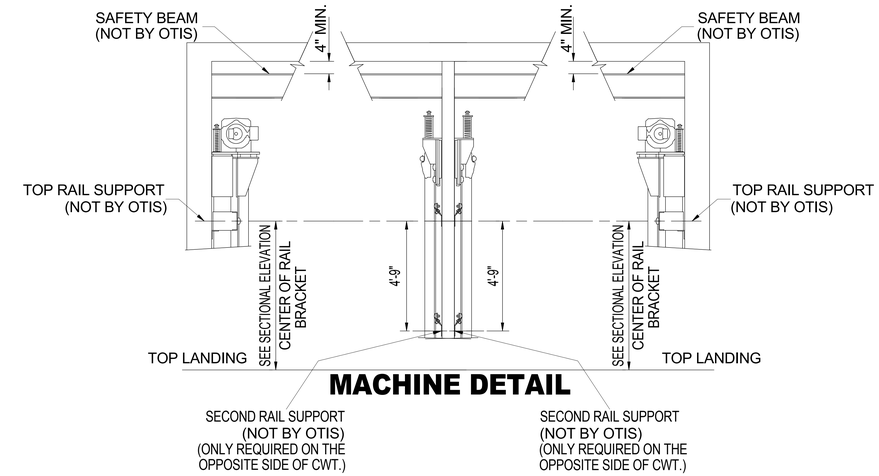

MACHINE DETAIL

	<= 2007 CODE YEAR		> 2009 CODE YEAR	
	CAB HEIGHT		CAB HEIGHT	
	7'-9"	9'-9"	7'-9"	9'-9"
MIN RISE	28'-11"			
MAX RISE	150'-0"			
MIN. TOTAL CLEAR HEIGHT	13'-9"	15'-9"	13'-7"	15'-7"
MAX. TOTAL CLEAR HEIGHT	MIN CLEAR HEIGHT + 2'-0" [609.6mm]			
PIT DEPTH	IF A17.7 IS ADOPTED THEN PIT DEPTH = 4'-6" IF A17.7 IS NOT ADOPTED THEN PIT DEPTH = 5'-6"			

- MINIMUM FLOOR HEIGHT IS 8'-3" [2515mm] with 7'-0" [2134] ENTRANCE
- MAXIMUM FLOOR HEIGHT IS 20'-0"
- HOISTWAY LIGHT SWITCH LOCATED 3'-0" [914] ABOVE TOP LANDING COORDINATE WITH OTIS
- 8'-0" [2438] ENTRANCE AVAILABLE WITH 9'-9" [2819] CAB.
- IF HOISTWAY VENTILATION IS REQUIRED, THE LOCATION CANNOT BE LOCATED ABOVE OR NEAR THE MACHINE OF THE ELEVATOR SYSTEM.

STANDARD WORKING RANGES

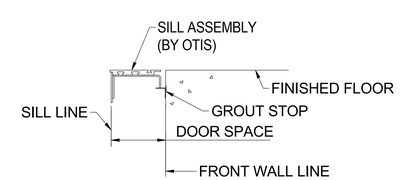

DETAIL "A"
SILL SUPPORT

ADEQUATE SUPPORT AT ALL FASTENING POINTS OF ENTRANCE ASSEMBLY REQUIRED. MUST WITHSTAND A HORIZONTAL PULL-OUT FORCE OF 140 LBS. @ EA. FASTENING POINT (8 @ EA. ENTRANCE) INCLUDING SUPPORT FOR CENTER SILL SUPPORT BRACKET (NOT BY OTIS).

NOTE H
DEPENDING ON THE BUILDING CONSTRUCTION, AN ADDITIONAL RAIL BRACKET SUPPORT MAY BE REQUIRED LOCATED 14'-0" [4267] ABOVE THE PIT FLOOR. CONTACT YOUR LOCAL SALES REPRESENTATIVE FOR ASSISTANCE.

APPROVAL
THIS ARRANGEMENT AND
SUPPLEMENTARY NOTES APPROVED

SIGNED: _____ DATE: _____

THIS WORK AND THE INFORMATION IT CONTAINS ARE THE PROPERTY OF OTIS ELEVATOR COMPANY ("OTIS"). IT IS DELIVERED TO OTHERS ON THE EXPRESS CONDITION THAT IT WILL BE USED ONLY FOR OR ON BEHALF OF OTIS; THAT NEITHER IT NOR THE INFORMATION IT CONTAINS WILL BE REPRODUCED OR DISCLOSED. IN WHOLE OR IN PART, WITHOUT THE WRITTEN CONSENT OF OTIS; AND THAT ON DEMAND IT AND ANY COPIES WILL BE PROMPTLY RETURNED TO OTIS.

UNPUBLISHED WORK © OTIS ELEVATOR COMPANY 2004
ALL RIGHTS RESERVED.

Gen2® **3500 # 350 F.P.M.**

CAR TYPE = PASSENGER **CONTROLLER LOCATION = ROOM**
SEISMIC = ZONE0 **GLASS BACK CAR = N**

Otis
A United Technologies Company

REVISION DATE: 3/2/2018 SHEET 3 OF 4

DWG. NO.: G2S 3500-EL

BUILDING
LOCATION
CONT. WITH
OWNER
ARCHT.
CONTRACT NO.

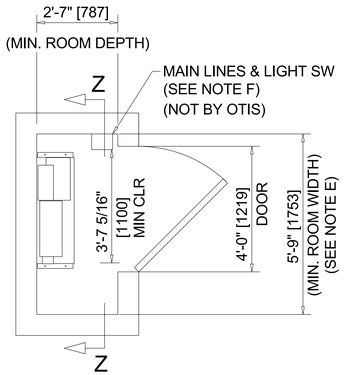

MINIMUM CONTROL
SPACE REQUIREMENTS
ONE CAR
WITHOUT AUTOMATIC
RECOVERY OPERATION

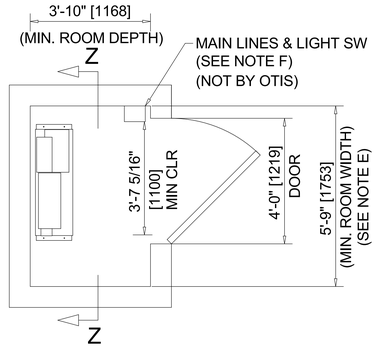

MINIMUM CONTROL
SPACE REQUIREMENTS
ONE CAR
WITH AUTOMATIC
RECOVERY OPERATION

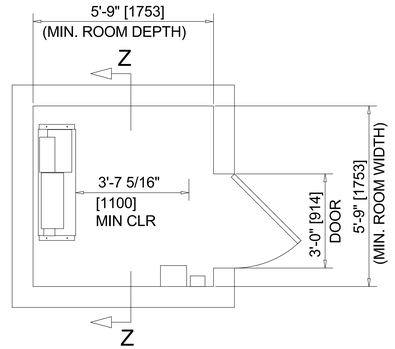

MINIMUM CONTROL
ROOM REQUIREMENTS
ONE CAR

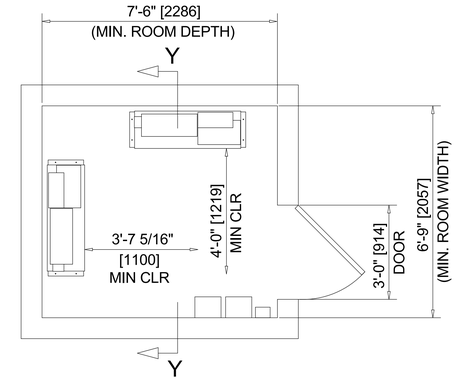

MINIMUM CONTROL
ROOM REQUIREMENTS
TWO CARS

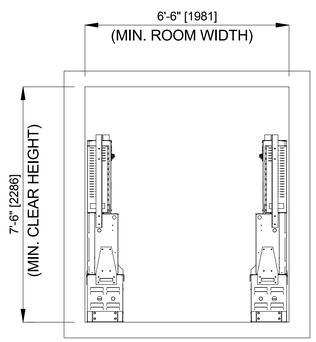

SECTION U - U

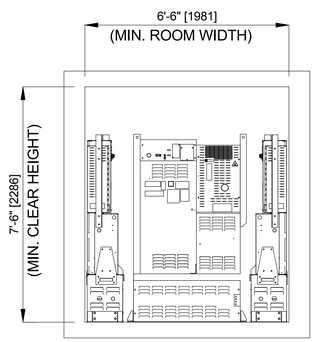

SECTION V - V

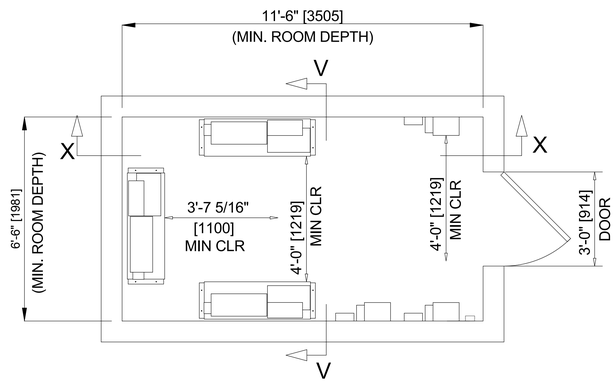

MINIMUM CONTROL
ROOM REQUIREMENTS
THREE CARS

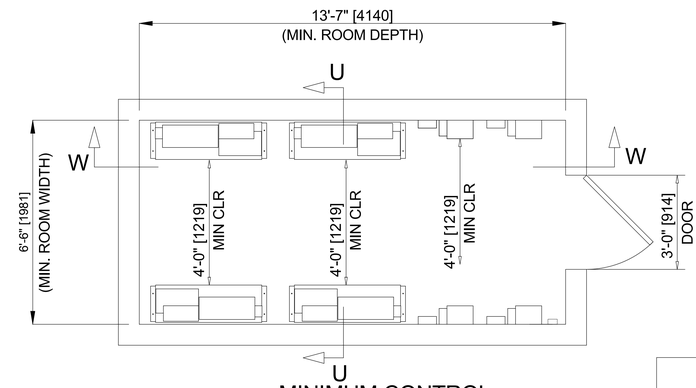

MINIMUM CONTROL
ROOM REQUIREMENTS
FOUR CARS

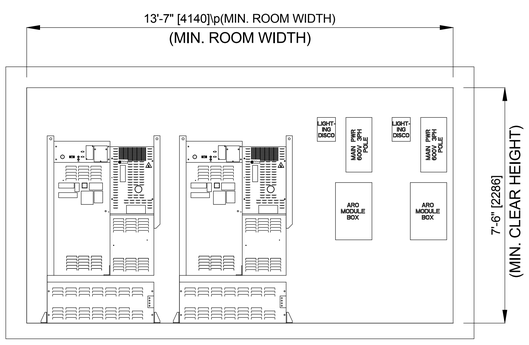

SECTION W - W

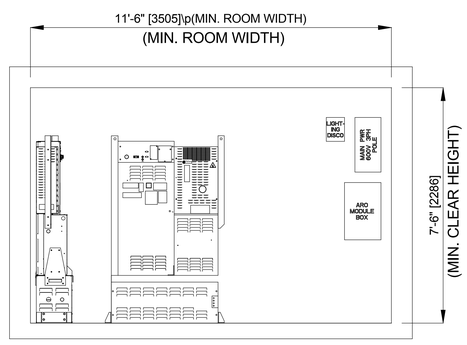

SECTION X - X

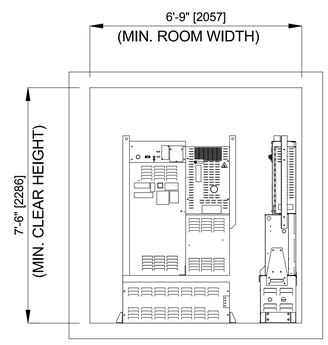

SECTION Y - Y

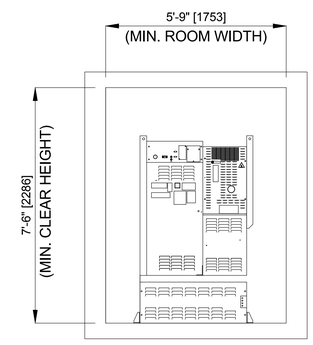

SECTION Z - Z

APPROVAL
THIS ARRANGEMENT AND
SUPPLEMENTARY NOTES APPROVED

SIGNED: _____ DATE: _____

THIS WORK AND THE INFORMATION IT CONTAINS ARE THE PROPERTY OF OTIS ELEVATOR COMPANY ("OTIS"). IT IS DELIVERED TO OTHERS ON THE EXPRESS CONDITION THAT IT WILL BE USED ONLY FOR OR ON BEHALF OF OTIS; THAT NEITHER IT NOR THE INFORMATION IT CONTAINS WILL BE REPRODUCED OR DISCLOSED. IN WHOLE OR IN PART, WITHOUT THE WRITTEN CONSENT OF OTIS; AND THAT ON DEMAND IT AND ANY COPIES WILL BE PROMPTLY RETURNED TO OTIS.

UNPUBLISHED WORK © OTIS ELEVATOR COMPANY 2004
ALL RIGHTS RESERVED.

Gen2® **3500 # 350 F.P.M.**

CAR TYPE = PASSENGER **CONTROLLER LOCATION = ROOM**
SEISMIC = ZONE0 **GLASS BACK CAR = N**

Otis
A United Technologies Company

REVISION DATE: 3/2/2018 SHEET 4 OF 4

DWG. NO.: G2S 3500-CR

BUILDING
LOCATION
CONT. WITH
OWNER
ARCHT.
CONTRACT NO.

KONE MONOSPACE® 700

MACHINE AT REAR CONFIGURATION & DIMENSIONS

Available in passenger shape with front opening option

Max Travel
300 ft. (91.4 m)

Max Landings
36

Speed
200, 350, 500 fpm
(1.00, 1.78, 2.54 m/s)

Car Height F
8, 9 or 10 ft.
(2438, 2743
or 3048 mm)

Entrance Height G
7, 8 or 9 ft.
(2134, 2438
or 2743 mm)

Visit kone.us for the latest project-specific details, BIM Models, CAD drawings, specifications, electrical data, reaction loads and building access requirements.

FRONT OPENING			A	A SEISMIC	B	C	D	E
	CAPACITY lbs. (kg)	OPENING TYPE	HOISTWAY WIDTH (mm)	HOISTWAY WIDTH (mm)	HOISTWAY DEPTH (mm)	INTERIOR WIDTH (mm)	INTERIOR DEPTH (mm)	DOOR WIDTH (mm)
PASSENGER	2000 (907)	SSP	7'-4" (2235)	7'-8" (2337)	6'-8" (2032)	5'-8½" (1740)	4'-3¼" (1302)	3'-0" (914)
	2500 (1134)	SSP-CO	8'-4" (2540)	8'-8" (2642)	6'-8" (2032)	6'-8½" (2045)	4'-3¼" (1302)	3'-6" (1067)
	3000 (1361)	SSP-CO	8'-4" (2540)	8'-8" (2642)	7'-2" (2184)	6'-8½" (2045)	4'-9¼" (1454)	3'-6" (1067)
	3500 (1588)	SSP-CO	8'-4" (2540)	8'-8" (2642)	7'-10" (2388)	6'-8½" (2045)	5'-5¼" (1657)	3'-6" (1067)
	4000 (1814)	CO	9'-4" (2845)	9'-8" (2946)	7'-10" (2388)	7'-8½" (2350)	5'-5¼" (1657)	4'-0" (1219)

CLEAR OVERHEAD H AND PIT DEPTH I												
	200 FPM (1.00 M/S)				350 FPM (1.78 M/S)				500 FPM (2.54 M/S)			
	I	I SEISMIC	H	H SEISMIC	I	I SEISMIC	H	H SEISMIC	I	I SEISMIC	H	H SEISMIC
CAPACITY lbs. (kg)	PIT DEPTH (mm)	PIT DEPTH (mm)	CLEAR OVERHD (mm)	CLEAR OVERHD (mm)	PIT DEPTH (mm)	PIT DEPTH (mm)	CLEAR OVERHD (mm)	CLEAR OVERHD (mm)	PIT DEPTH (mm)	PIT DEPTH (mm)	CLEAR OVERHD (mm)	CLEAR OVERHD (mm)
2000 (907)	5'-3" (1600)	5'-3" (1600)	15'-6" (4724)	16'-11" (5156)	5'-7" (1702)	6'-7" (2007)	16'-11" (5156)	16'-11" (5156)	5'-7" (1702)	6'-7" (2007)	16'-11" (5156)	16'-11" (5156)
2500 (1134)	5'-3" (1600)	5'-3" (1600)	15'-0" (4572)	16'-11" (5156)	5'-5" (1651)	6'-5" (1956)	16'-7" (5055)	16'-11" (5156)	5'-5" (1651)	6'-5" (1956)	16'-7" (5055)	16'-11" (5156)
3000 (1361)	5'-3" (1600)	5'-3" (1600)	15'-2" (4623)	16'-11" (5156)	5'-5" (1651)	6'-5" (1956)	16'-10" (5131)	16'-11" (5156)	5'-5" (1651)	6'-5" (1956)	16'-10" (5131)	16'-11" (5156)
3500 (1588)	5'-5" (1651)	5'-5" (1651)	14'-10" (4521)	16'-11" (5156)	5'-5" (1651)	6'-5" (1956)	16'-4" (4978)	16'-11" (5156)	5'-5" (1651)	6'-5" (1956)	16'-4" (4978)	16'-11" (5156)
4000 (1814)	5'-6" (1676)	5'-6" (1676)	15'-1" (4597)	16'-11" (5156)	5'-6" (1676)	6'-6" (1981)	16'-7" (5055)	16'-11" (5156)	7'-5" (2261)	8'-5" (2565)	16'-11" (5156)	16'-11" (5156)

CONTROL SPACE		J	K	L
CAPACITY lbs. (kg)	CONTROLLER SPACE	WIDTH (mm)	DEPTH (mm)	DOOR WIDTH (mm)
2000 to 4000 (907 to 1814)	integral or remote cabinet	4'-4" (1321)	1'-8" (508)	4'-0" (1219)
2000 to 4000 (907 to 1814)	adjacent or remote room	5'-0" (1524)	dimension (B)	3'-0" (914)

Notes

(1) Smaller pit and overhead dimensions may be available per specific applications. Contact your KONE Sales Professional for further information.

(2) Buffer service platforms are required when pit depth exceeds 8'-6" (2590 mm).

(3) Hoist beams (by KONE) are required for installation (by others). Dimension H reflects clear under hoist beam.

(4) If occupied space exists below the hoistway, consult your KONE Sales Professional.

(5) All dimensions are based on an 8'-0" (2438 mm) cab with a 7'-0" (2134 mm) door. Alternate car and door heights are available, but may affect dimension H.

(6) Add 8" (203 mm) in non-seismic and 12" (305 mm) in seismic zones to clear overhead dimension H for front-only passenger car if cab features glass-back wall.

(7) If an Emergency Battery Device (EBD) is required, please contact your KONE Sales Professional for further details regarding dimensions J and L.

(8) Contact your local KONE Sales Professional regarding local code variations when utilizing the integral and remote closet options.

(9) If utilizing KONE Polaris™ destination control system or KONE Access™, contact your local KONE Sales Professional regarding control space size requirements.

Plan views

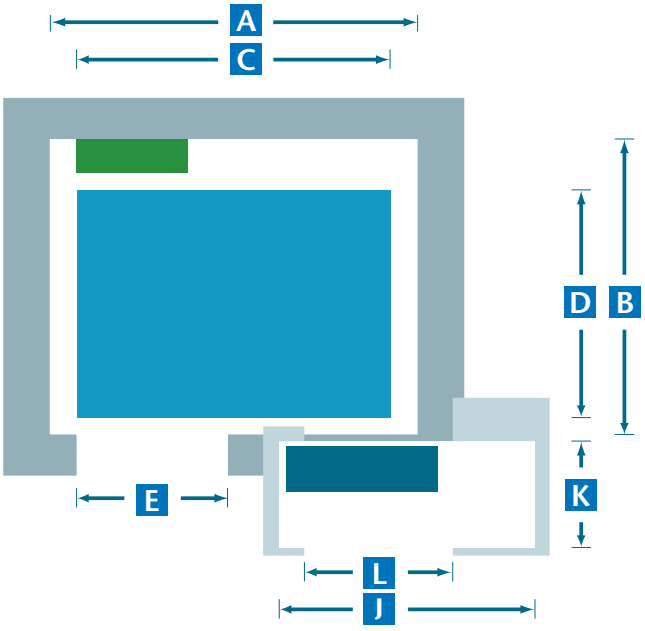

(7)

Integral Control Closet (standard)

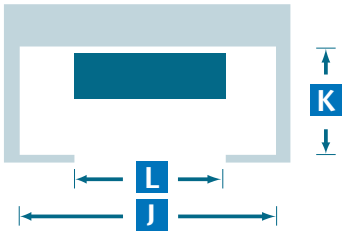

(7)

Remote Control Closet
(option 1)

(7)

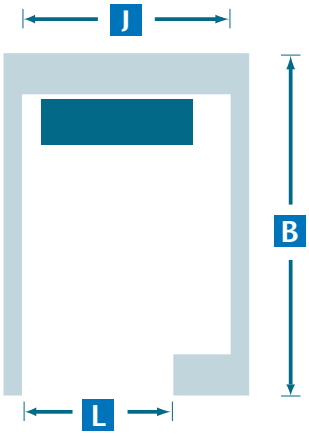

Adjacent or
Remote Control Room
(option 2)

Section view

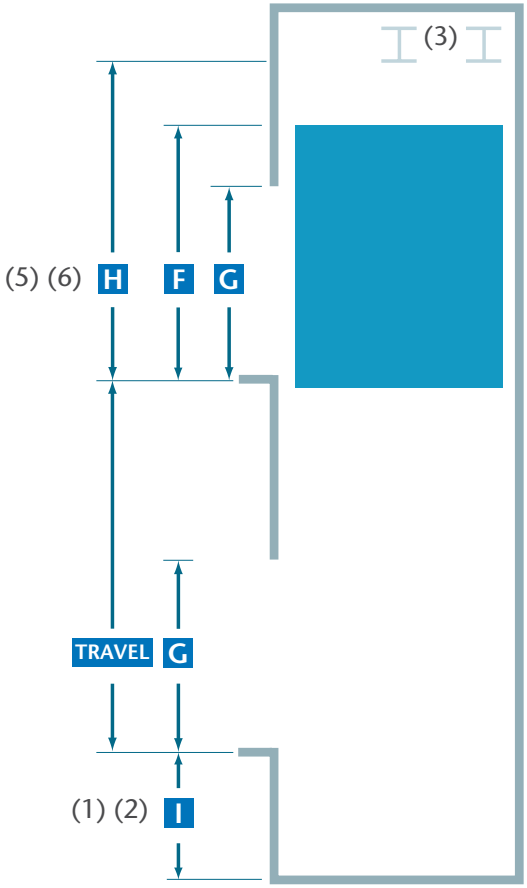

(4)

KONE
kone.us

This publication is for general informational purposes only. KONE Inc. reserves the right to alter the product design and specifications without prior notice. Minor differences between printed and actual colors may exist. KONE MonoSpace® and KONE Access™ are registered trademarks or trademarks of KONE Corporation. Copyright © 2016 KONE Inc.

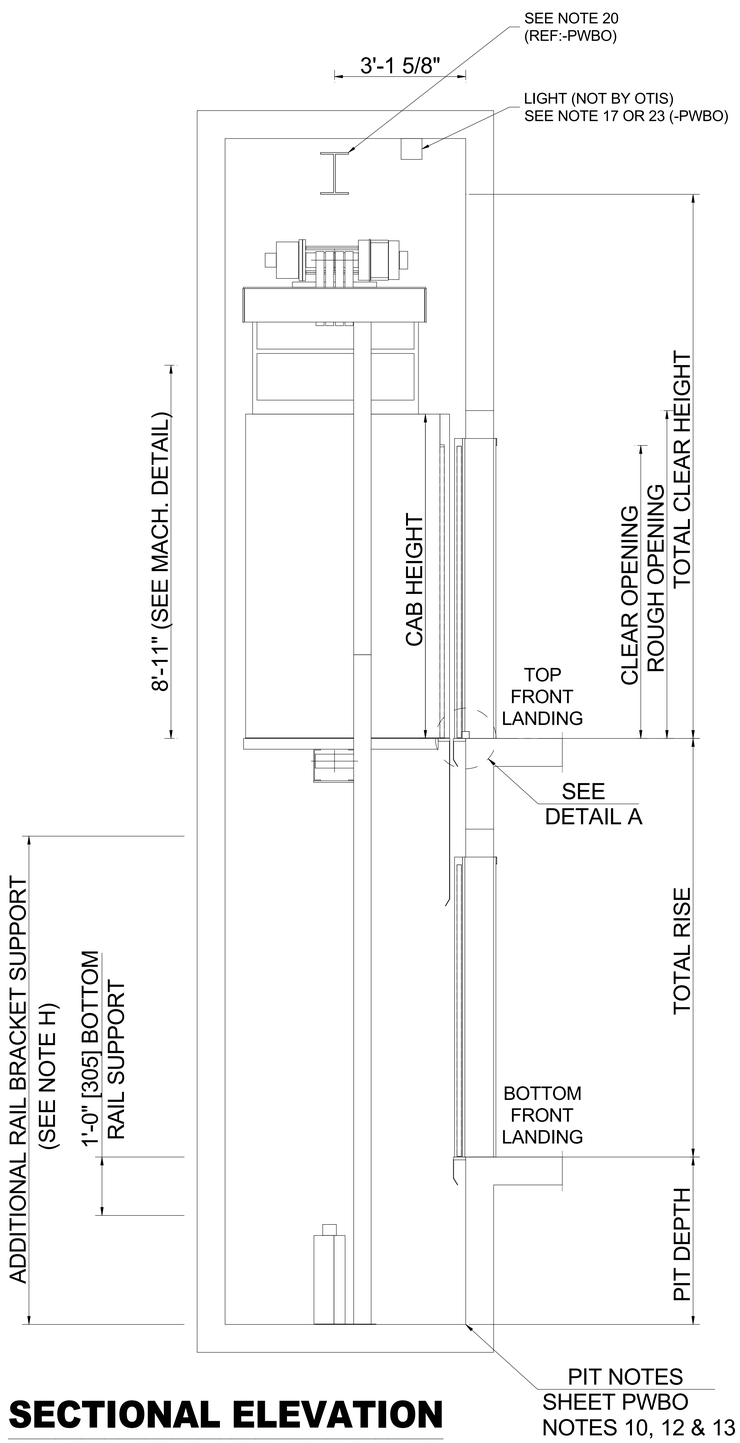

SECTIONAL ELEVATION

FOR MAX. SPACING BETWEEN INSERTS SEE RAIL FORCE DETAIL

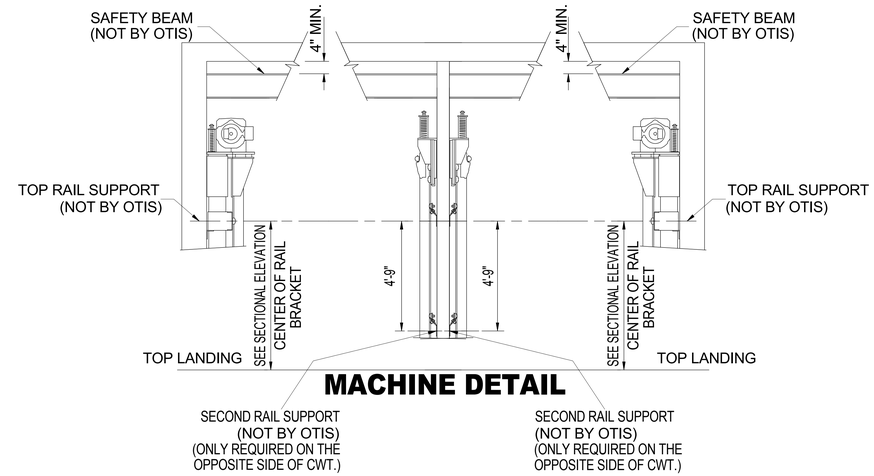

MACHINE DETAIL

	<= 2007 CODE YEAR		> 2009 CODE YEAR	
	CAB HEIGHT		CAB HEIGHT	
	7'-9"	9'-9"	7'-9"	9'-9"
MIN RISE	10'-2"			
MAX RISE	80'-0"			
MIN. TOTAL CLEAR HEIGHT	13'-0"	15'-0"	12'-10"	14'-10"
MAX. TOTAL CLEAR HEIGHT	MIN CLEAR HEIGHT + 2'-0" [609.6mm]			
PIT DEPTH	IF A17.7 IS ADOPTED THEN PIT DEPTH = 4'-0" IF A17.7 IS NOT ADOPTED THEN PIT DEPTH = 5'-0"			

- MINIMUM FLOOR HEIGHT IS 8'-3" [2515mm] with 7'-0" [2134] ENTRANCE
- MAXIMUM FLOOR HEIGHT IS 20'-0"
- HOISTWAY LIGHT SWITCH LOCATED 3'-0" [914] ABOVE TOP LANDING COORDINATE WITH OTIS
- 8'-0" [2438] ENTRANCE AVAILABLE WITH 9'-9" [2819] CAB.
- IF HOISTWAY VENTILATION IS REQUIRED, THE LOCATION CANNOT BE LOCATED ABOVE OR NEAR THE MACHINE OF THE ELEVATOR SYSTEM.

STANDARD WORKING RANGES

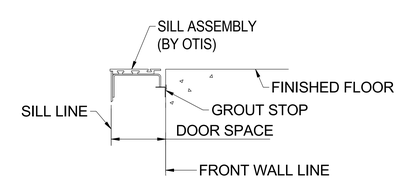

DETAIL "A"
SILL SUPPORT

ADEQUATE SUPPORT AT ALL FASTENING POINTS OF ENTRANCE ASSEMBLY REQUIRED. MUST WITHSTAND A HORIZONTAL PULL-OUT FORCE OF 140 LBS. @ EA. FASTENING POINT (8 @ EA. ENTRANCE) INCLUDING SUPPORT FOR CENTER SILL SUPPORT BRACKET (NOT BY OTIS).

NOTE H
DEPENDING ON THE BUILDING CONSTRUCTION, AN ADDITIONAL RAIL BRACKET SUPPORT MAY BE REQUIRED LOCATED 14'-0" [4267] ABOVE THE PIT FLOOR. CONTACT YOUR LOCAL SALES REPRESENTATIVE FOR ASSISTANCE.

APPROVAL
THIS ARRANGEMENT AND
SUPPLEMENTARY NOTES APPROVED

SIGNED: _____ DATE: _____

THIS WORK AND THE INFORMATION IT CONTAINS ARE THE PROPERTY OF OTIS ELEVATOR COMPANY ("OTIS"). IT IS DELIVERED TO OTHERS ON THE EXPRESS CONDITION THAT IT WILL BE USED ONLY FOR OR ON BEHALF OF OTIS; THAT NEITHER IT NOR THE INFORMATION IT CONTAINS WILL BE REPRODUCED OR DISCLOSED. IN WHOLE OR IN PART, WITHOUT THE WRITTEN CONSENT OF OTIS; AND THAT ON DEMAND IT AND ANY COPIES WILL BE PROMPTLY RETURNED TO OTIS.

UNPUBLISHED WORK © OTIS ELEVATOR COMPANY 2004
ALL RIGHTS RESERVED.

Gen2® **2100 # 150 F.P.M.**

CAR TYPE = PASSENGER **CONTROLLER LOCATION = ROOM**
SEISMIC = ZONE0 **GLASS BACK CAR = N**

Otis
A United Technologies Company

REVISION DATE: 3/2/2018 SHEET 3 OF 4

DWG. NO.: G2S 2100-EL

BUILDING
LOCATION
CONT. WITH
OWNER
ARCHT.
CONTRACT NO.

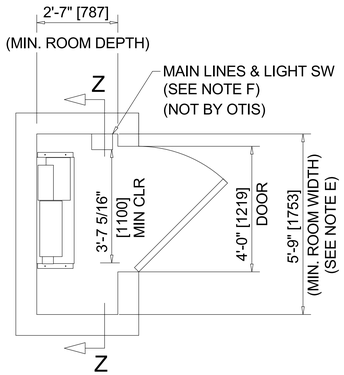

MINIMUM CONTROL
SPACE REQUIREMENTS
ONE CAR
WITHOUT AUTOMATIC
RECOVERY OPERATION

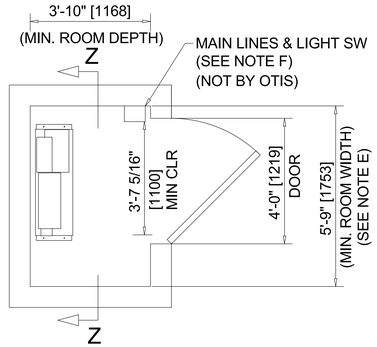

MINIMUM CONTROL
SPACE REQUIREMENTS
ONE CAR
WITH AUTOMATIC
RECOVERY OPERATION

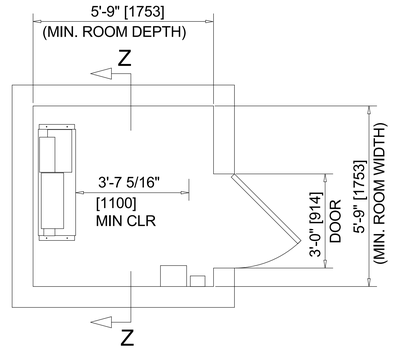

MINIMUM CONTROL
ROOM REQUIREMENTS
ONE CAR

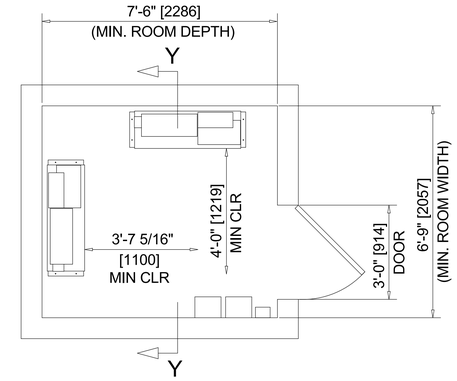

MINIMUM CONTROL
ROOM REQUIREMENTS
TWO CARS

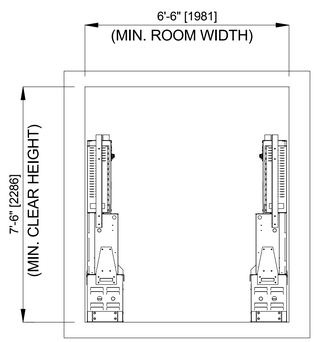

SECTION U - U

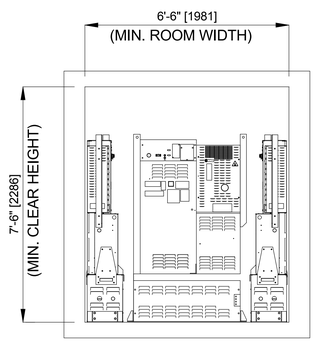

SECTION V - V

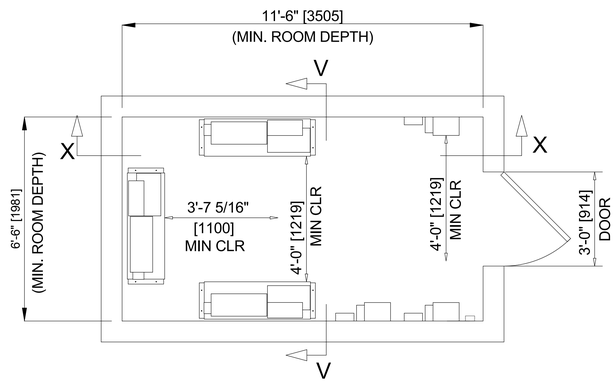

MINIMUM CONTROL
ROOM REQUIREMENTS
THREE CARS

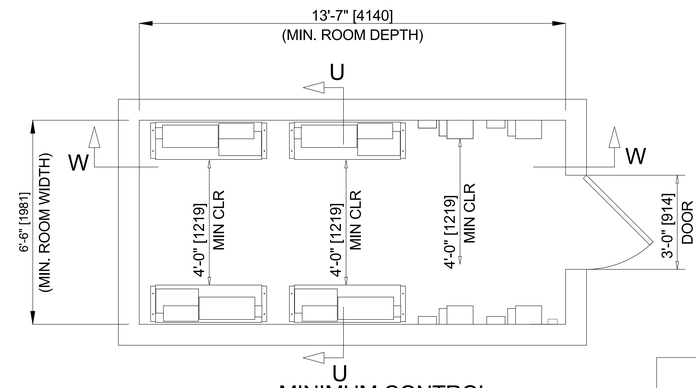

MINIMUM CONTROL
ROOM REQUIREMENTS
FOUR CARS

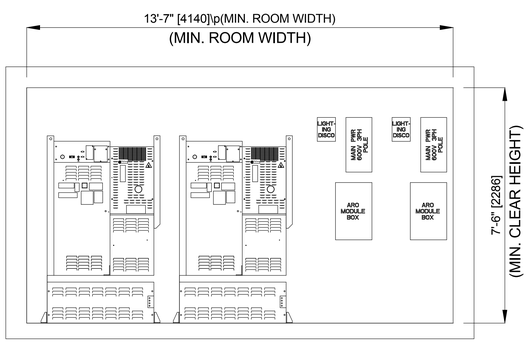

SECTION W - W

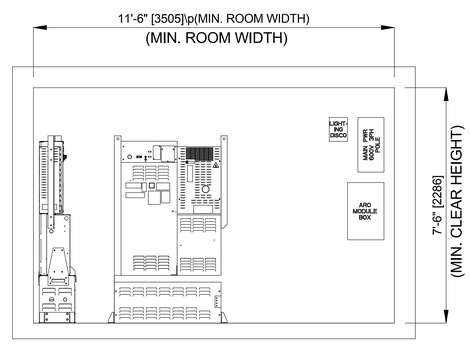

SECTION X - X

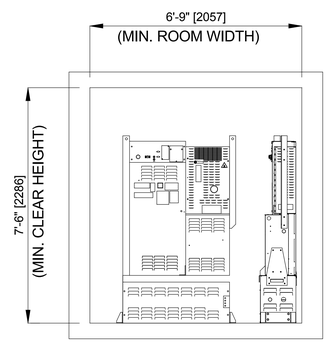

SECTION Y - Y

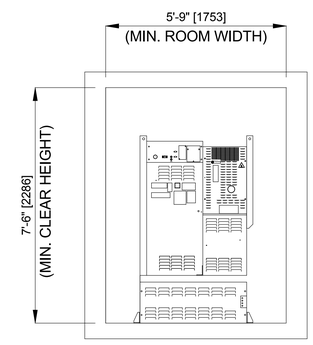

SECTION Z - Z

APPROVAL
THIS ARRANGEMENT AND
SUPPLEMENTARY NOTES APPROVED

SIGNED: _____ DATE: _____

THIS WORK AND THE INFORMATION IT CONTAINS ARE THE PROPERTY OF OTIS ELEVATOR COMPANY ("OTIS"). IT IS DELIVERED TO OTHERS ON THE EXPRESS CONDITION THAT IT WILL BE USED ONLY FOR OR ON BEHALF OF OTIS; THAT NEITHER IT NOR THE INFORMATION IT CONTAINS WILL BE REPRODUCED OR DISCLOSED. IN WHOLE OR IN PART, WITHOUT THE WRITTEN CONSENT OF OTIS; AND THAT ON DEMAND IT AND ANY COPIES WILL BE PROMPTLY RETURNED TO OTIS.

UNPUBLISHED WORK © OTIS ELEVATOR COMPANY 2004
ALL RIGHTS RESERVED.

Gen2® **2100 # 150 F.P.M.**

CAR TYPE = PASSENGER **CONTROLLER LOCATION = ROOM**
SEISMIC = ZONE0 **GLASS BACK CAR = N**

Otis
A United Technologies Company

REVISION DATE: 3/2/2018 SHEET 4 OF 4

DWG. NO.: G2S 2100-CR

BUILDING
LOCATION
CONT. WITH
OWNER
ARCHT.
CONTRACT NO.

LANDINGS	FRONT MARKING	FLOOR HEIGHT

RAIL FORCE & BRACKET SPACING DETAIL

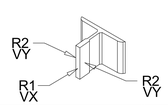

CAR	R1 (LBS.)	508
	R2 (LBS.)	177
	VX (LBS.)	2672
	VY (LBS.)	1336
	MAXIMUM BRACKET SPACING	13'-7"
	RAIL SIZE	#1
CWT	R1 (LBS.)	259
	R2 (LBS.)	28
	VX (LBS.)	2791
	VY (LBS.)	1395
	MAXIMUM BRACKET SPACING	13'-7"
	RAIL SIZE	#1-1/2

CAR R1 = SAFETY APPLICATION
CWT R1 = SAFETY APPLICATION
R2 = LOADING OR RUNNING

REQUIREMENTS FOR RAIL BRACKET SUPPORT (NOT BY OTIS):
DEFLECTION NOT TO EXCEED 1/8"
BASED ON HORIZONTAL RAIL FORCES.

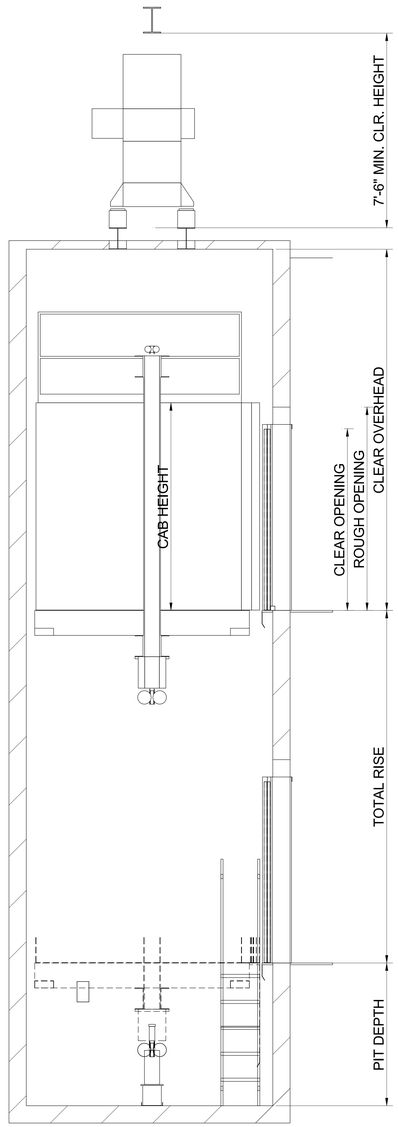

SECTIONAL ELEVATION

FOR MAX. SPACING BETWEEN INSERTS SEE RAIL FORCE DETAIL

* COUNTERWEIGHT SAFTIES ARE REQUIRED WHEN OCCUPPIED SPACE EXISTS BELOW THE PIT, PER ASME A17.1 SECTION 2.6.

	CAB HEIGHT	
	8'-0"	9'-7"
MIN. "PIT DEPTH"	5'-6"	
MAX. "PIT DEPTH"	15'-6"	
MIN. "CLEAR OVERHEAD"	13'-11"	15'-6"
MIN. "TOTAL RISE"	20'-0"	
MAX. "TOTAL RISE"	302'-0"	

STANDARD WORKING RANGES

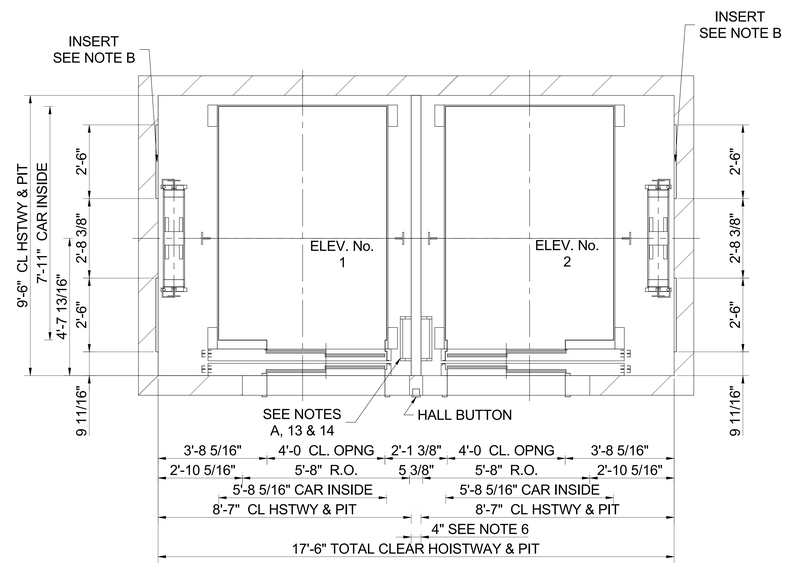

PLAN VIEW

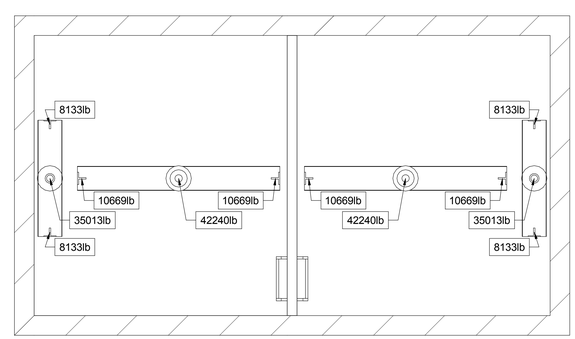

PIT PLAN VIEW

FORCE SHOWN INCLUDES DOUBLING FOR IMPACT (SEE NOTE 11)

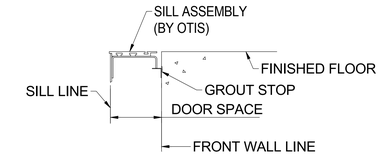

SEE NOTE 7

DETAIL "A"
SILL SUPPORT

ADEQUATE SUPPORT AT ALL FASTENING POINTS OF ENTRANCE ASSEMBLY REQUIRED. MUST WITHSTAND A HORIZONTAL PULL-OUT FORCE OF 140 LBS. @ EA. FASTENING POINT (8 @ EA. ENTRANCE) INCLUDING SUPPORT FOR CENTER SILL SUPPORT BRACKET (NOT BY OTIS).

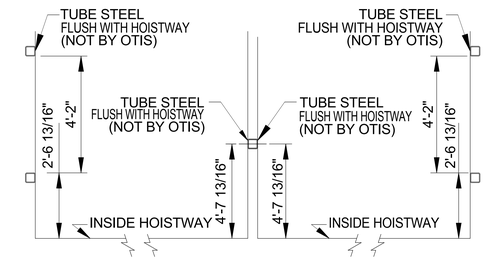

NOTE A
IF CUTOUT REQUIRED FOR PIT LADDER,
23" (WIDTH) X 2-1/2"(DEPTH) X PIT DEPTH + 4'-0"
OTIS REPRESENTATIVE TO CONFIRM YOUR SPECIFIC LOCATION.

NOTE B
THESE DIMENSIONS ARE BASED ON HOISTWAY SIZES SHOWN & 30" INSERTS. IF EITHER OF THESE VARY, CONSULT THE SALES REPRESENTATIVE.

APPROVAL
THIS ARRANGEMENT AND SUPPLEMENTARY NOTES APPROVED

SIGNED: _____ DATE: _____

THIS WORK AND THE INFORMATION IT CONTAINS ARE THE PROPERTY OF OTIS ELEVATOR COMPANY ("OTIS"). IT IS DELIVERED TO OTHERS ON THE EXPRESS CONDITION THAT IT WILL BE USED ONLY FOR OR ON BEHALF OF OTIS; THAT NEITHER IT NOR THE INFORMATION IT CONTAINS WILL BE REPRODUCED OR DISCLOSED. IN WHOLE OR IN PART, WITHOUT THE WRITTEN CONSENT OF OTIS; AND THAT ON DEMAND IT AND ANY COPIES WILL BE PROMPTLY RETURNED TO OTIS.

UNPUBLISHED WORK © OTIS ELEVATOR COMPANY 2004
ALL RIGHTS RESERVED.

Gen2®

4500 #
350 F.P.M

CAB TYPE = VENERCB
SEISMIC = ZONE4
COUNTER WEIGHT SAFTEY = Y
GLASS BACK CAR = N

Otis
A United Technologies Company

REVISION DATE:	SHEET 2 OF 4
DWG. NO.: GEN4535H-PN	
BUILDING	
LOCATION ,	
CONT. WITH	
OWNER	
ARCHT.	
CONTRACT NO.	

NOTE - DO NOT SCALE THIS DRAWING

REFER TO DWG'S. NO. GEN4535H-PWBO, -MR, -EL, -SLAB1, -SLAB2

EXPRESS DRAW: 9999

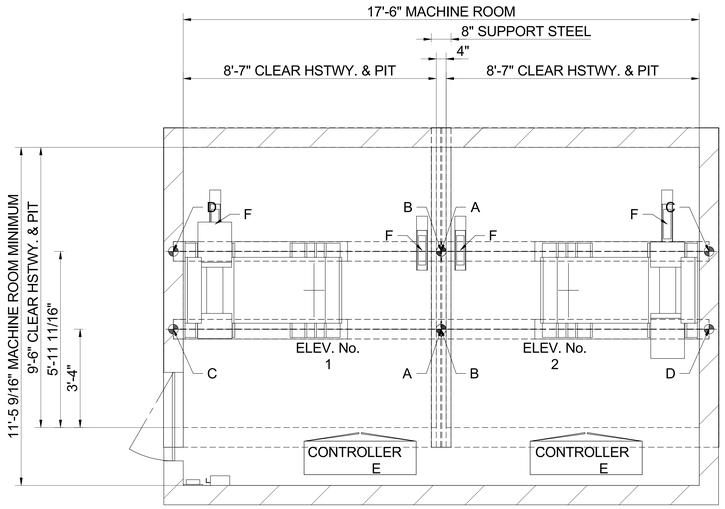

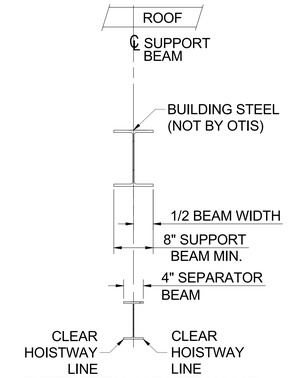

BETWEEN HOISTWAYS STEEL SUPPORT

BUILDING REACTIONS

	KIPS	
	STATIC	DYNAMIC
A	7.26	10.67
B	8.47	12.54
C	11.08	16.96
D	11.32	17.25
E	0.37	0.37
F	1.2	1.9
MACH. BEAM SIZE	W10-39 x 113"LG	

SLAB TEMPLATE No.

ELEV. No:	TEMPLATE:
1	AAA27EH252
2	AAA27EH236

DESIGN CRITERIA FOR BUILDING IMMEDIATE SUPPORTS

1. STATIC CONDITION: $\triangle_{ALLOW.} = \frac{SPAN}{1666}$

2. DYNAMIC CONDITION: $STRESS_{ALLOW.}$ = 80% OF THE PERMITTED STRESSES FOR STATIC LOADS.

MACHINE PLAN VIEW

SUITABLE MACHINE ROOM WITH MINIMUM CLEAR HEIGHT OF 7'-6".
MINIMUM MACHINE ROOM ENTRY DOOR 3'-0" X 7'-0"
(NOT BY OTIS) (SEE NOTE 16).

MACHINE SIZE	
MACHINE LENGTH	5'-3 3/4"
MACHINE WIDTH	4'-10 1/4"
MACHINE HEIGHT	3'-4 1/16"

APPROVAL
THIS ARRANGEMENT AND
SUPPLEMENTARY NOTES APPROVED

SIGNED: _____ DATE: _____

THIS WORK AND THE INFORMATION IT CONTAINS ARE THE PROPERTY OF OTIS ELEVATOR COMPANY ("OTIS"). IT IS DELIVERED TO OTHERS ON THE EXPRESS CONDITION THAT IT WILL BE USED ONLY FOR OR ON BEHALF OF OTIS; THAT NEITHER IT NOR THE INFORMATION IT CONTAINS WILL BE REPRODUCED OR DISCLOSED. IN WHOLE OR IN PART, WITHOUT THE WRITTEN CONSENT OF OTIS; AND THAT ON DEMAND IT AND ANY COPIES WILL BE PROMPTLY RETURNED TO OTIS.

UNPUBLISHED WORK © OTIS ELEVATOR COMPANY 2004
ALL RIGHTS RESERVED.

Gen2®

4500 #
350 F.P.M

CAB TYPE = VENERCB
SEISMIC = ZONE4

COUNTER WEIGHT SAFTEY = Y
GLASS BACK CAR = N

Otis
A United Technologies Company

REVISION DATE: | SHEET 3 OF 4

DWG. NO.: GEN4535H-EL

BUILDING

LOCATION ,

CONT. WITH

OWNER

ARCHT.

CONTRACT NO.

NOTE - DO NOT SCALE THIS DRAWING

REFER TO DWG'S. NO. GEN4535H-PWBO, -PN, -MR, -SLAB1, -SLAB2

EXPRESS DRAW: 9999