MEETING DATE: May 29, 2007

AGENDA ITEM: Discussion and Clarification of Project Elements of the Culver West Alexander Park Improvement Project (P-835).

ATTACHMENTS

		Page
1.	Plans and specifications for the Culver West Alexander Park Improvement Project (P-835) as presented at the May 21, 2007 Council meeting.	1-9

Culver West Alexander Park Improvement Project

Culver CITY

GENERAL NOTES

1. DO NOT SCALE DRAWINGS. CONTRACTOR SHALL VERIFY ALL CONDITIONS AND DIMENSIONS AT JOB SITE PRIOR TO BIDDING AND BEFORE STARTING EACH PORTION OF THE WORK. IF DISCREPANCIES ARE FOUND, THE CONTRACTOR SHALL PROMPTLY NOTIFY THE ARCHITECT USING A REQUEST FOR INFORMATION BEFORE COMMENCING WITH THE WORK.
2. CONSTRUCTION ACTIVITIES SHALL BE PERMITTED DURING HOURS AS SPECIFIED BY LOCAL AGENCIES HAVING JURISDICTION OVER THE SAID PROJECT. NO CONSTRUCTION ON CITY OR NATIONAL HOLIDAYS.
3. CONTRACTOR SHALL VERIFY SIZES AND LOCATIONS OF ALL POWER , WATER OR DRAIN NSTALLATIONS WITH EQUIPMENT MANUFACTURERS BEFORE PROCEEDING WITH THE WORK. CHANGES TO ACCOMMODATE FIELD CONDITIONS OR SUBSTITUTIONS SHALL BE MADE WITHOUT ADDITIONAL COST TO OWNER.
4. CONTRACTOR SHALL PROVIDE TEMPORARY FIRE PROTECTION AS PER COUNTY OF LOS ANGELES FIRE DEPARTMENT RULES AND REGULATIONS THROUGHOUT THE PERIOD OF WORK.
5. PERMITS: EACH CONTRACTOR WHOSE WORK IS NOT NORMALLY COVERED BY THE BUILDING PERMIT, SUCH AS ELECTRICAL, MECHANICAL, PLUMB

S.

8. ALL CONSTRUCTION AND MATERIALS SHALL COMPLY WITH THE CURRENT EDITION OF CALIFORNIA BUILDING CODE, UNIFORM PLUMBING CODE,NATIONAL ELECTRICAL AND UNIFORM BUILDING CODE.
9. THE CONTRACTOR SHALL PROVIDE ALL SHORING AND BRACING REQUIRED TO ADEQUATELY PROTECT PERSONNEL AND ADJACENT PROPERTY. CONTRACTOR TO ENSURE SAFETY OF STRUCTURE THROUGHOUT THE CONSTRUCTION PERIOD. THE CONTRACTOR SHALL PROVIDE AT HIS OWN EXPENSE, ALL ERECTION BRACING CALCULATIONS AND DRAWINGS REQUIRED BY LAW OR BY SAFE CONSTRUCTIONS PRACTICES.
10. CONTRACTOR TO ENSURE ALL CONSTRUCTION WORK SHALL BE IN COMPLIANCE WITH CURRENT CALIFORNIA O.S.H.A. GUIDELINES AND RECOMMENDATIONS.
11. THE ARCHITECT AND/OR CONSTRUCTION MANAGER DO NOT ASSUME ANY RESPONSIBILITY FOR JOB SITE SAFETY FOR ANY PERSONS INCLUDING WORKMEN, VISITORS OR ANY OTHER ENTITY WHICH MAY ENTER ONTO THE SITE.
12. CONTRACTOR SHALL BE RESPONSIBLE FOR LOCATING AND AVOIDING HAZARDS INCLUDING BURIED UTILITIES OR PIPELINES.
13. CONTRACTOR IS RESPONSIBLE FOR THE MEANS OF CONSTRUCTION, SEQUENCE OF CONSTRUCTION AND SAFETY PRECAUTIONS.
14. NEW CONSTRUCTION DIMENSIONS ARE BASED UPON SITE MEASUREMENTS OF EXISTING CONDITIONS. THE CONTRACTOR SHALL VERIFY DIMENSIONS AGAINST ACTUAL SITE CONDITIONS AND SHALL NOTIFY THE ARCHITECT OF ANY AREA WHICH DIFFERS FROM THE INTENT OF THE DRAWINGS OR SHOWS DISCREPANCIES BETWEEN SECTIONS OF THE DRAWINGS. THE INTENT OF THE CONTRACT DOCUMENTS IS TO INCLUDE ALL ITEMS NECESSARY FOR THE PROPER EXECUTION AND COMPLETION OF THE WORK BY THE CONTRACTOR. LARGER SCALE DETAIL DRAWINGS TAKE PRECEDENCE OVER SMALLER SCALE DETAIL DRAWINGS.
15. DETAILS ARE INTENDED TO SHOW METHOD AND MANNER OF DESIGN INTENT. MINOR MODIFICATIONS MAY BE REQUIRED TO SUIT JOB DIMENSIONS OR SITE CONDITIONS AND SHALL BE INCLUDED AS PART OF THE WORK. WORK NOT EXPLICITLY IN THE DRAWINGS BUT CLEARLY IMPLIED AS NECESSARY TO COMPLETE THE DRAWING SHALL BE INTERPRETED AS FULLY DRAWN.
16. PATCH TO MATCH ALL AREAS OF WORK, SO THE PATCHED WORK IS INDISTINGUISHABLE FROM THE EXISTING ADJACENT WORK.
17. THE CONTRACTOR SHALL GUARANTEE ALL LABOR, MATERIAL AND EQUIPMENT FOR ONE YEAR FROM THE DATE OF ACCEPTANCE BY OWNER.
18. IT SHALL BE THE RESPONSIBILITY OF THE CONTRACTOR TO PROVIDE SUPERVISION OF THE CONSTRUCTION WORK TO INSURE THAT IT IS BUILT IN CONFORMANCE WITH THE APPROVED PLANS AND NOTES.
19. THE ARCHITECT, ENGINEERS, CONSTRUCTION MANAGER AND THE OWNER SHALL HAVE ACCESS TO THE SITE AT ALL TIMES IN ORDER TO OBSERVE THE WORK.
20. SHOP DRAWINGS, CATALOGUE CUTS, DATA SHEETS, AND SAMPLES SHALL BE PROVIDED AS REQUIRED IN THE SPECIFICATIONS AND ON STRUCTURAL, MECHANICAL, ELECTRICAL, PLUMBING, FIRE PROTECTION, AND LANDSCAPE DRAWINGS AND NOTES.
21. THE CONTRACTOR SHALL REQUEST A COMPLETE SET OF PRINTS WHICH SHALL BE MAINTAINED IN GOOD ORDER AT THE SITE, ALL DIFFERENCES BETWEEN THE LOCATIONS OR ARRANGEMENTS INDICATED ON THESE DRAWINGS AND THOSE OF THE ACTUAL INSTALLATION SHALL BE RECORDED IN RED PENCIL ON THE SET. AT THE END OF T HE PROJECT AND PRIOR TO FINAL PAYMENT, THE CONTRACTOR SHALL SIGN AND DATE EACH "AS BUILT" DRAWING AS BEING CORRECT AND ACCURATE REPRESENTATION OF THE WORK, AND SHALL SUBMIT THE COMPLETE PACKAGE TO THE OWNER.
22. UNLESS OTHERWISE DIRECTED IN WRITING BY THE OWNER, GENERAL CONDITIONS OF THE CONTRACT FOR CONSTRUCTION, AIA DOCUMENT A-201, LATEST EDITION, SHALL GOVERN THE WORK OF THE CONTRACTOR AS IF FULLY REPRODUCED HERE. COPIES MAY BE EXAMINED AT THE OFFICE OF THE ARCHITECT.
23. A PERMIT FROM THE DEPARTMENT OF PUBLIC WORKS IS REQUIRED FOR A PROTECTION FENCE CANOPY AN OR OVER ANY STREET OR PUBLIC SPACE.
24. COST OR USE CHARGES FOR TEMPORARY FACILITIES SHALL BE INCLUDED IN THE CONTRACT SUM. ALLOW OTHER ENTITIES TO USE TEMPORARY SERVICES AND FACILITIES WITHOUT COST, INCLUDING, BUT NOT LIMITED TO, OWNER'S CONSTRUCTION FORCES, ARCHITECT, TESTING AGENCIES, AND AUTHORITIES HAVING JURISDICTION.
25. SANITARY FACILITIES: COMPLY WITH THE CITY OF CULVER CITY REQUIREMENTS FOR SANITARY FACILITIES USE BY CONSTRUCTION PERSONNEL. CONTRACTOR WILL NOT BE PERMITTED TO USE THE EXISTING RESTROOMS. LOCATION OF TEMPORARY SANITARY FACILITIES SHALL BE AS APPROVED BY THE CITY OF CULVER CITY.
26. CONTRACTOR SHALL PROVIDE TEMPORARY FACILITIES AS NECESSARY TO COMPLETE THE WORK, BE IT POWER, WATER, WASTE DISPOSAL CONTAINERS, TELEPHONE, FIELD ´

RECEIVED WITHIN FIVE DAYS AFTER THE NOTICE TO PROCEED. REQUESTS RECEIVED AFTER THAT TIME MAY BE CONSIDERED OR REJECTED AT DISCRETION OF ARCHITECT.

II. CONDITIONS:
1. REQUESTED SUBSTITUTION OR COMPARABLE PRODUCT OFFERS OWNER A SUBSTANTIAL ADVANTAGE IN COST, TIME, ENERGY CONSERVATION, OR OTHER CONSIDERATIONS, AFTER DEDUCTING ADDITIONAL RESPONSIBILITIES CONTRACTOR MUST ASSUME. CONTRACTOR'S ADDITIONAL RESPONSIBILITIES MAY INCLUDE COMPENSATION TO ARCHITECT FOR REDESIGN AND EVALUATION SERVICES, INCREASED COST OF OTHER CONSTRUCTION BY OWNER, AND SIMILAR CONSIDERATIONS.
2. REQUESTED SUBSTITUTION OR COMPARABLE PRODUCT DOES NOT REQUIRE EXTENSIVE REVISIONS TO THE CONTRACT DOCUMENTS.
3. REQUESTED SUBSTITUTION OR COMPARABLE PRODUCT IS CONSISTENT WITH THE CONTRACT DOCUMENTS AND WILL PRODUCE INDICATED RESULTS.
4. SUBSTITUTION OR COMPARABLE PRODUCT REQUEST IS FULLY DOCUMENTED AND PROPERLY SUBMITTED.
5. REQUESTED SUBSTITUTION OR COMPARABLE PRODUCT WILL NOT ADVERSELY AFFECT CONTRACTOR'S CONSTRUCTION SCHEDULE.
6. REQUESTED SUBSTITUTION OR COMPARABLE PRODUCT HAS RECEIVED NECESSARY APPROVALS OF AUTHORITIES HAVING JURISDICTION.
7. REQUESTED SUBSTITUTION OR COMPARABLE PRODUCT IS COMPATIBLE WITH OTHER PORTIONS OF THE WORK.
8. REQUESTED SUBSTITUTION OR COMPARABLE PRODUCT HAS BEEN COORDINATED WITH OTHER PORTIONS OF THE WORK. REQUESTED SUBSTITUTION OR COMPARABLE PRODUCT PROVIDES SPECIFIED WARRANTY.

28. CONCRETE:
I. MINIMUM 28-DAY ULTIMATE COMPRESSIVE STRENGTH SHALL BE 2,500 PSI, CLASS 3, 5" SLUMP.
II. AGGREGATES:
1. LIGHTWEIGHT ASTM C-330
2. HARDROCK ASTM C-33
III. CONCRETE COVERAGE OF REINFORCING FOR SLAB ON GRADE: AT CENTERLINE OF SLAB.
IV. CONCRETE COVERAGE OF REINFORCING FOR FORMED CONCRETE: 1 ½".
V. REINFORCING STEEL (#5 AND SMALLER) TO BE PER AST A-615, GRADE 40.
VI. WELDED WIRE FABRIC TO BE PER ASTM A-185.
I. REINFORCING INDICATED TO BE CONTINUOUS MAY BE SPLICED W/ LAPS, PER CODE.

29. MASONRY
I. CONCRETE BLOCK UNITS SHALL CONFORM TO U.B.C. STANDARD 21-5 OR 21-4.
II. REBAR SHALL BE CENTERED IN THE CONCRETE BLOCK CELL IN WHICH IT IS LOCATED.
III. CONCRETE BLOCK UNITS ARE TO BE STAGGERED.
IV. CONCRETE BLOCK UNITS TO HAVE VERTICAL CONTINUITY OF CELLS UNOBSTRUCTED. ALL CELLS CONTAINING REINFC

-RODUCE CONSISTENCY FOR POURING WITHOUT SEGREGATION OF THE CONSTITUENTS. THE GROUT MAY CONTAIN 2 PARTS PEA GRAVEL, MAXIMUM SIZE 3/8"

SPECIFICATIONS

PARKING LOT PAVING SEALER AND STRIPING WORK
PARKING LOT SHALL HAVE SEALER APPLIED (INCLUDING FILLING OF SURFACE CRACKS) AND THEN BE STRIPED. PARKING LOT SEALER SHALL BE SEALMASTER MASTERSEAL ASPHALT-BASED PAVEMENT SEALER. PREPARATION AND APPLICATION SHALL BE IN ACCORDANCE WITH MANUFACTURER'S PRINTED TECHNICAL DATA SHEET AND OTHER PERTINENT DOCUMENTS, A PORTION OF WHICH ARE REPEATED FOR CONVENIENCE, BELOW. CONTRACTOR SHALL REVIEW COMPLETE TECHNICAL DATA SHEET, OTHER PERTINENT INFORMATION AND ALSO PROVIDE ALL WORKERS WITH THE RELEVANT MSDS SHEETS AND EXPLAIN THE DETAILS TO ALL WORKERS. MANUFACTURER'S PRINTED MATERIAL IS A PART OF THIS WORK.

SURFACE PREPARATION
REMOVE AND REPLACE ALL DAMAGED ASPHALT PAVING, INCLUDING AREAS COMPLETELY SATURATED BY OIL OR GREASE. CLEAN AND FILL SURFACE CRACKS 1/4" OR WIDER TO THE LEVEL OF ADJACENT AREAS. USE SEALMASTER (COLD POUR) CRACK FILLER. SWEEP, FLUSH, OR BLOW PATCHED SURFACE AREA FREE OF DUST, DIRT, AND FOREIGN MATTER. SCRUB OILY AND GREASY AREAS WITH STRONG DETERGENT, THEN FLUSH WITH WATER. THE SURFACE TO BE COATED MAY BE DAMP, BUT MUST BE FREE OF STANDING WATER PRIOR TO APPLICATION. ALLOW SUFFICIENT TIME FOR FRESHLY PATCHED ASPHALT CONCRETE OR NEWLY LAID ASPHALT TO CURE.

APPLICATION
APPLY SEALER, (2) COATS MINIMUM, IN STRICT ACCORDANCE WITH MANUFACTURERS PRINTED INSTRUCTIONS.

PRECAUTIONS
RECOMMENDED AND AMBIENT TEMPERATURE RANGE FOR APPLICATION IS 50'F TO 90'F. APPLICATION SHOULD BE POSTPONED IF WET OR FREEZING WEATHER IS EXPECTED 24 HOURS FOLLOWING APPLICATION. WHEN TRANSPORTING THIS PRODUCT, BE SURE THE CONTAINER IS SECURED AND THE LID IS TIGHT. DO NOT ALLOW CONTAINER TO TUMBLE, AS THIS MAY LOOSEN THE LID AND ALLOW LEAKAGE TO OCCUR.

PARKING LOT PAINT STRIPING
PAINT SHALL BE BENJAMIN MOORE INDUSTRIAL MAINTENANCE COATING M56 SAFETY & ZONE MARKING ALKYD, COLOR: WHITE. PREPARE SURFACES AND APPLY PAINT IN ACCORDANCE WITH MANUFACTURER'S PRINTED INSTRUCTIONS WHICH ARE MADE A PART OF THIS WORK. CONTRACTOR SHALL REVIEW MANUFACTURER'S PERTINENT INFORMATION AND ALSO PROVIDE ALL WORKERS WITH THE RELEVANT MSDS SHEETS AND EXPLAIN THE DETAILS TO ALL WORKERS.

MCCONNELL ALLEY CONCRETE WALK AND WALL PAINTING WORK
MCCONNELL ALLEY PAVING SHALL HAVE EXISTING ASPHALT PAVING REMOVED FULL DEPTH AND EXISTING SUBGRADE REMOVED TO A DEPTH NECESSARY FOR NEW 4" CONCRETE ON 6" CRUSHED STONE BASE ON COMPACTED SUBGRADE. BRICK AND WOOD WALLS ON EACH SIDE OF THE ALLEY SHALL BE PROPERLY PREPARED AND PAINTED.
PRIMER (ONE COAT) SHALL BE BENJAMIN MOORE FRESH START LATEX PRIMER 023. FINISH PAINT (TWO COATS) SHALL BE BENJAMIN MOORE MOORGARD ACRYLIC MODIFIED LATEX LOW LUSTRE PAINT 103. TWO COLORS (COLORS TO BE DETERMINED) WILL BE USED. PRESSURE WASH BRICK WALLS AND FURTHER PREPARE BRICK AND WOOD IN ACCORDANCE WITH MANUFACTURER'S PRINTED INSTRUCTIONS.
CONTRACTOR SHALL REVIEW COMPLETE MANUFACTURER'S PERTINENT INFORMATION AND ALSO PROVIDE ALL WORKERS WITH THE RELEVANT MSDS SHEETS AND EXPLAIN THE DETAILS TO ALL WORKERS. MANUFACTURER'S PRINTED INFORMATION IS MADE PART OF THIS WORK.

RESURFACING WORK

A. TENNIS COURT RESURFACING WORK
1. REMOVE SURFACE MATERIAL FROM COURT BY HYDROBLASTING AT 10,000 PSI.
2. FILL CRACKS AND SPALLS WITH LATEXITE ACRYLIC COURT BINDER.
3. APPLY LAXELITE ACRYLIC CONCRETE PRIMER.
4. APPLY LAXELITE ACRYLIC RESURFACER MIXED WITH #60 SILICA.
5. APPLY TWO (2) LAXELITE ACRYLIC COLOR COATS OF GREEN AND RED MIXED WITH #90 SILICA FOR MEDIUM SPEED.
6. APPLY LAXELITE ACRYLIC TOP COATS (TWO (2) COATS) WITHOUT SAND.
7. STRIPE COURTS TO USTA SPECS.

B. HANDBALL COURTS RESURFACING WORK
1. REMOVE SURFACE MATERIAL FROM COURT BY HYDROBLASTING AT 10,000 PSI.
2. FILL CRACKS AND SPALLS WITH LATEXITE ACRYLIC COURT BINDER.
3. APPLY LAXELITE ACRYLIC CONCRETE PRIMER.
4. APPLY TWO (2) LAXELITE ACRYLIC COLOR COATS OF GREEN AND RED MIXED WITH #90 SILICA FOR THE MEDIUM SPEED.
5. APPLY LAXELITE ACRYLIC TOP COATS (TWO (2) COATS) WITHOUT SAND.
6. STRIPE TO MATCH EXISTING.

C. PADDLE TENNIS COURTS RESURFACING WORK
1. REMOVE EXIST. ASPHALT AND REPLACE.
2. APPLY TWO (2) LAXELITE ACRYLIC COLOR COATS OF GREEN AND RED MIXED WITH #90 SILICA FOR THE MEDIUM SPEED.
3. APPLY LAXELITE ACRYLIC TOP COATS (TWO (2) COATS) WITHOUT SAND.
4. STRIPE TO MATCH EXISTING.

D. BASKETBALL COURT RESURFACING WORK
1. REMOVE EXIST. ASPHALT AND REPLACE.
2. APPLY LAXELITE ACRYLIC CONCRETE PRIMER.
3. APPLY LAXELITE ACRYLIC RESURFACER MIXED WITH #60 SILICA.
4. APPLY TWO (2) LAXELITE ACRYLIC COLOR COATS OF GREEN AND RED MIXED WITH #90 SILICA FOR THE MEDIUM SPEED.
5. APPLY LAXELITE ACRYLIC TOP COATS (TWO (2) COATS) WITHOUT SAND.
6. STRIPE COURT.
7. FOUL LANES AND CIRCLE, AND CENTER JUMP CIRCLE SHALL BE ONE COLOR AND BALANCE OF COURT A SECOND COLOR. PLAYING LINES SHALL BE WHITE. LAYOUT SHALL BE PER NATIONAL FEDERATION OF STATE HIGH SCHOOL ASSOCIATION'S STANDARDS.

E. APPROVED RESURFACER
TRUELINE SURFACING
1441 W. POMONA ROAD #30
CORONA, CA 92882
CONTACT: ED KRUSE, 951-817-0777

DEMOLITION & CONSTRUCTION WASTE SPECIFICATIONS
1. SURVEY EXISTING CONDITIONS AND CORRELATE WITH REQUIREMENTS INDICATED TO DETERMINE EXTENT OF SELECTIVE DEMOLITION REQUIRED.
2. VERIFY THAT THE NECESSARY UTILITIES HAVE BEEN DISCONNECTED AND CAPPED.
3. INVENTORY AND RECORD THE CONDITION OF ITEMS TO BE REMOVED AND REINSTALLED AND ITEMS TO BE REMOVED AND SALVAGED.
4. WHEN UNANTICIPATED MECHANICAL, ELECTRICAL, OR STRUCTURAL ELEMENTS THAT CONFLICT WITH INTENDED FUNCTION OR DESIGN ARE ENCOUNTERED, INVESTIGATE AND MEASURE THE NATURE AND EXTENT OF CONFLICT. PROMPTLY SUBMIT A WRITTEN REPORT TO ARCHITECT.
5. EXISTING SERVICES/SYSTEMS: MAINTAIN SERVICES/SYSTEMS INDICATED TO REMAIN AND PROTECT THEM AGAINST DAMAGE DURING SELECTIVE DEMOLITION OPERATIONS.
6. SERVICE/SYSTEM REQUIREMENTS: LOCATE, IDENTIFY, DISCONNECT, AND SEAL OR CAP OFF INDICATED UTILITY SERVICES AND MECHANICAL/ELECTRICAL SYSTEMS SERVING AREAS TO BE SELECTIVELY DEMOLISHED.
7. ARRANGE TO SHUT OFF INDICATED UTILITIES WITH THE CITY OF CULVER CITY DEPARTMENT OF PUBLIC WORKS.
8. IF SERVICES/SYSTEMS ARE REQUIRED TO BE REMOVED, RELOCATED, OR ABANDONED, BEFORE PROCEEDING WITH SELECTIVE DEMOLITION PROVIDE TEMPORARY SERVICES/SYSTEMS THAT BYPASS AREA OF SELECTIVE DEMOLITION AND THAT MAINTAIN CONTINUITY OF SERVICES/SYSTEMS TO AFFECTED BUILDING(S) AND/OR AREAS OF THE SITE.
9. SITE ACCESS AND TEMPORARY CONTROLS: CONDUCT SELECTIVE DEMOLITION AND DEBRIS-REMOVAL OPERATIONS TO ENSURE MINIMUM INTERFERENCE WITH ROADS, STREETS, WALKS, WALKWAYS, AND OTHER ADJACENT OCCUPIED AND USED FACILITIES AND IN COMPLIANCE WITH THE CITY OF CULVER CITY REQUIREMENTS.
10. TEMPORARY FACILITIES: PROVIDE TEMPORARY BARRICADES AND OTHER PROTECTION REQUIRED TO PREVENT INJURY TO PEOPLE AND DAMAGE TO THE SITE, ADJACENT BUILDINGS AND FACILITIES TO REMAIN AND IN COMPLIANCE WITH THE CITY OF CULVER CITY REQUIREMENTS.
11. TEMPORARY SHORING: PROVIDE AND MAINTAIN SHORING, BRACING, AND STRUCTURAL SUPPORTS AS REQUIRED TO PRESERVE STABILITY AND PREVENT MOVEMENT, SETTLEMENT, OR COLLAPSE OF CONSTRUCTION AND FINISHES TO REMAIN, AND TO PREVENT UNEXPECTED OR UNCONTROLLED MOVEMENT OR COLLAPSE OF CONSTRUCTION BEING DEMOLISHED.
12. GENERAL: DEMOLISH AND REMOVE EXISTING CONSTRUCTION ONLY TO THE EXTENT REQUIRED BY NEW CONSTRUCTION AND AS INDICATED. USE METHODS REQUIRED TO COMPLETE THE WORK WITHIN LIMITATIONS OF GOVERNING REGULATIONS AND AS FOLLOWS:
I. NEATLY CUT OPENINGS AND HOLES PLUMB, SQUARE, AND TRUE TO DIMENSIONS REQUIRED. USE CUTTING METHODS LEAST LIKELY TO DAMAGE CONSTRUCTION TO REMAIN OR ADJOINING CONSTRUCTION. USE HAND TOOLS OR SMALL POWER TOOLS DESIGNED FOR SAWING OR GRINDING, NOT HAMMERING AND CHOPPING, TO MINIMIZE DISTURBANCE OF ADJACENT SURFACES. TEMPORARILY COVER OPENINGS TO REMAIN.
II. CUT OR DRILL FROM THE EXPOSED OR FINISHED SIDE INTO CONCEALED SURFACES TO AVOID MARRING EXISTING FINISHED SURFACES.
III. DO NOT USE CUTTING TORCHES UNTIL WORK AREA IS CLEARED OF FLAMMABLE MATERIALS. AT CONCEALED SPACES, SUCH AS DUCT AND PIPE INTERIORS, VERIFY CONDITION AND CONTENTS OF HIDDEN SPACE BEFORE STARTING FLAME-CUTTING OPERATIONS. MAINTAIN PORTABLE FIRE-SUPPRESSION DEVICES DURING FLAME-CUTTING OPERATIONS.
IV. LOCATE SELECTIVE DEMOLITION EQUIPMENT AND REMOVE DEBRIS AND MATERIALS SO AS NOT TO IMPOSE EXCESSIVE LOADS ON SUPPORTING WALLS, FLOORS, OR FRAMING.
V. DISPOSE OF DEMOLISHED ITEMS AND MATERIALS PROMPTLY.
13. REMOVED AND REINSTALLED ITEMS:
I. CLEAN AND REPAIR ITEMS TO FUNCTIONAL CONDITION ADEQUATE FOR INTENDED REUSE. PAINT EQUIPMENT TO MATCH NEW EQUIPMENT.
II. PACK OR CRATE ITEMS AFTER CLEANING AND REPAIRING. IDENTIFY CONTENTS OF CONTAINERS.
III. PROTECT ITEMS FROM DAMAGE DURING TRANSPORT AND STORAGE.
IV. REINSTALL ITEMS IN LOCATIONS INDICATED. COMPLY WITH INSTALLATION REQUIREMENTS FOR NEW MATERIALS AND EQUIPMENT. PROVIDE CONNECTIONS, SUPPORTS, AND MISCELLANEOUS MATERIALS NECESSARY TO MAKE ITEM FUNCTIONAL FOR USE INDICATED.
14. EXISTING ITEMS TO REMAIN: PROTECT CONSTRUCTION INDICATED TO REMAIN AGAINST DAMAGE AND SOILING DURING SELECTIVE DEMOLITION AND CONSTRUCTION. WHEN PERMITTED BY ARCHITECT, ITEMS MAY BE REMOVED TO A SUITABLE, PROTECTED STORAGE LOCATION DURING SELECTIVE DEMOLITION AND CLEANED AND REINSTALLED IN THEIR ORIGINAL LOCATIONS AFTER SELECTIVE DEMOLITION OPERATIONS ARE COMPLETE.
15. EXCEPT FOR ITEMS OR MATERIALS INDICATED TO BE REUSED, SALVAGED, REINSTALLED, OR OTHERWISE INDICATED TO REMAIN OWNER'S PROPERTY, REMOVE DEMOLISHED MATERIALS FROM PROJECT SITE AND LEGALLY DISPOSE OF THEM. DO NOT BURN DEMOLISHED MATERIALS.
16. DEFINITIONS:
I. CONSTRUCTION WASTE: BUILDING AND SITE IMPROVEMENT MATERIALS AND OTHER SOLID WASTE RESULTING FROM CONSTRUCTION, REMODELING, RENOVATION, OR REPAIR OPERATIONS. CONSTRUCTION WASTE INCLUDES PACKAGING.
II. DEMOLITION WASTE: BUILDING AND SITE IMPROVEMENT MATERIALS RESULTING FROM DEMOLITION OR SELECTIVE DEMOLITION OPERATIONS.
III. DISPOSAL: REMOVAL OFF-SITE OF DEMOLITION AND CONSTRUCTION WASTE AND SUBSEQUENT SALE, RECYCLING, REUSE, OR DEPOSIT IN LANDFILL OR INCINERATOR ACCEPTABLE TO AUTHORITIES HAVING JURISDICTION.
IV. RECYCLE: RECOVERY OF DEMOLITION OR CONSTRUCTION WASTE FOR SUBSEQUENT PROCESSING IN PREPARATION FOR REUSE.
V. SALVAGE: RECOVERY OF DEMOLITION OR CONSTRUCTION WASTE AND SUBSEQUENT SALE OR REUSE IN ANOTHER FACILITY.
VI. SALVAGE AND REUSE: RECOVERY OF DEMOLITION OR CONSTRUCTION WASTE AND SUBSEQUENT INCORPORATION INTO THE WORK.
17. EXCEPT AS OTHERWISE SPECIFIED, DO NOT ALLOW WASTE MATERIALS THAT ARE TO BE DISPOSED OF ACCUMULATE ON-SITE.
18. REMOVE AND TRANSPORT DEBRIS IN A MANNER THAT WILL PREVENT SPILLAGE ON ADJACENT SURFACES AND AREAS.
19. BURNING: DO NOT BURN WASTE MATERIALS.
20. DISPOSAL: TRANSPORT WASTE MATERIALS OFF OWNER'S PROPERTY IN COMPLIANCE WITH THE CITY OF CULVER CITY REQUIREMENTS AND LEGALLY DISPOSE OF THEM.

COURT FENCE NOTES
1. REPAIR PERSONNEL GATE FROM BASKETBALL COURT TO TENNIS COURT.
2. REMOVE & ALTER EXIST. FENCE AS NECESSARY TO INSTALL NEW 10'-0" PAIR GATES ((2) LEAVES @ 5'0") FROM BASKETBALL COURT TO TENNIS COURT.
3. REMOVE ALL CHAIN LINK FENCE FABRIC FROM FENCING & GATES AROUND PADDLE TENNIS & TENNIS COURTS. INSTALL NEW FENCE FABRIC, 1 ¼" DIAMOND MESH, 9 GAUGE BLACK VINYL COATED. BOTTOM RAIL TO ALL FENCES.
4. PAINT ALL POSTS & BARS BLACK. PAINT SHALL BE BENJAMIN MOORE MOORCRAFT SUPERSPEC D.T.M. ALKYD SEMI-GLOSS ENAMEL 224, TWO (2) COATS MINIMUM. PREPARE SURFACES AND APPLY PAINT IN STRICT ACCORDANCE WITH MANUFACTURER'S PRINTED INSTRUCTIONS.

NEW ASPHALT COURT SURFACING NOTE
1. REMOVE EXIST. ASPHALT TOP COURSE [2"-4" ESTIMATED THICKNESS].
2. REPAIR EXISTING BASE COURSE AS NECESSARY & COMPACT BASE COURSE 95% OF AASHTO-180.
3. INSTALL FULL DEPTH NEW HOT MIX ASPHALT IN MAXIMUM 2" LIFTS. PREPARATION OF EXISTING SURFACES, FORMULATION AND INSTALLATION OF HOT MIX ASPHALT AND TACK COATS SHALL BE IN STRICT ACCORDANCE WITH THE REQUIREMENTS OF THE CITY DEPARTMENT OF PUBLIC WORKS STANDARD SPECIFICATIONS.

NEW POOCH PATH FENCE
1. 42" HIGH, 1 ¼" DIAMOND MESH 9 GAUGE BLACK VINYL COATED FENCE FABRIC.
2. END & CORNER POSTS, 2.375" O X 3.65 LBS/FT.
3. INTERMEDIATE POSTS, 1.90" O X 2.72 LBS/FT.
4. ALL POSTS TO BE BLACK VINYL COLOR COATED. TOP AND BOTTOM RAILS.

NEW BENCHES & NEW PICNIC TABLES
BENCHES: OUTDOOR CREATIONS #408SK W/ SKATE RESISTANT BUMPS AND CITY LOGO, COLOR: TAN. CONTACT JOE MYRHVOLD, 530-365-6106

PICNIC TABLES: OUTDOOR CREATIONS #100 SSK 92" SMOOTH TOP PICNIC TABLE W/ SKATE RESISTANT BUMPS AND CITY LOGO, COLOR: TAN. CONTACT JOE MYRHVOLD, 530-365-6106

NEW POOCH PATH
PAINT TWO LINES AT THE EDGE OF MC CONNELL ALLEY, SIDEWALK TRANSVERSING THE PARK AND CONTINUING DOWN THE ALLEY FROM PARKING AREA TO MOORE STREET SIDEWALK (ADJACENT TO PADDLE TENNIS AND TENNIS COURTS.) STENCIL DOG PAW (BLACK, 3"0) PRINTS THROUGHOUT POOCH PATH (EXACT LOCATION TBD). PAINT MATERIAL TO BE MATRIX ACRYLIC HIGH TRAFFIC COLOR, W/COLORS TO BE DETERMINED. PREPARE EXISTING SURFACES AND APPLY MATERIAL IN STRICT ACCORDANCE W/ MANUFACTURER'S PRINTED INSTRUCTIONS. APPROVED SURFACE: TRUELINE SURFACING, 1441 W. POMONA ROAD #30, CORONA CA 92882. CONTACT: ED KRUSE, 951-817-0777.

HANDBALL COURTS WALL PAINTING
HANDBALL COURT CONCRETE WALLS SHALL BE PREPARED AND PAINTED USING BENJAMIN MOORE CONCRETE STAIN 072. WORK SHALL BE IN STRICT ACCORDANCE W/ MANUFACTURER'S WRITTEN INSTRUCTIONS. CONTRACTOR SHALL REVIEW ALL MANUFACTURER'S INFORMATION AND PROVIDE MSDS SHEETS AND EXPLAIN DETAILS TO WORKERS. TWO COLORS (TBD) WILL BE USED, ONE COLOR TO BE USED ON THE PREVIOUSLY PAINTED LOWER PORTION AND ONE COLOR ON THE UPPER PORTION. THE HORIZONTAL LINE ON THE HANDBALL COURT BALLS SHALL BE LOCATED PER US HANDBALL ASSOCIATION RULES AND SHALL BE WHITE, BENJAMIN MOORE INDUSTRIAL MAINTENANCE COATING M56 SAFETY & ZONE MARKING ALKYD.

4162 Wade Avenue, Culver City, CA 90230

PLUMBING, ELECTRICAL AND SIGN WORK

PLUMBING, ELECTRICAL AND SIGN WORK SHALL BE PERFORMED AS DESIGN-BUILD WORK UNDER THE GENERAL CONTRACTOR. SEE PLUMBING, ELECTRICAL AND SIGN DESIGN WORK NOTES ON DWG. 1/A1/05 FOR ADDITIONAL INFORMATION.

LEGAL DESCRIPTION

LOTS 19 THROUGH 24, TRACT 5740, MB 66, P 11, RECORDED OF THE COUNTY OF LOS ANGELES, LOTS 257 THROUGH 264, TRACT 7147, MB 80, P 36, RECORDED OF THE COUNTY OF LOS ANGELES, A PORTION OF THE IGNACIO MACHADO 84.095 ACRE ALLOTMENT OF THE RANCHO LA BALLONA, AS ADJUDICATED IN DISTRICT COURT CASE NO. 2000 AND SHOWN ON CLERK'S FILED MAP 62.3, RECORDS OF THE COUNTY OF LOS ANGELES, AND THAT PORTION OF WADE STREET (50.00 FEET WIDE)VACATED PER ORDINANCE CS-88 OF THE CITY OF CULVER CITY.

PROJECT DESCRIPTION

RENOVATION OF EXISTING PARK INCLUDING, BUT NOT LIMITED TO:
1. ADD NEW ENTRANCE ARCH AT MCCONNELL ALLEY.
2. ADD NEW SECURITY GATE AT MOORE STREET ENTRANCE.
3. EXTEND EXISTING UTILITIES TO EXISTING STORAGE BUILDING (WATER, POWER, SANITARY SEWER).
4. ENLARGE EXISTING GROUP PICNIC AREA.
5. ADD NEW SECURITY HARDWARE AT EXISTING RECREATION BUILDING.
6. RESURFACE EXISTING TENNIS, PADDLE TENNIS, BASKETBALL AND HANDBALL COURTS.
7. RESURFACE EXISTING PARKING LOT.
8. REPAIR AND REPAINT EXISTING RESTROOMS.
9. ADD NEW DRINKING FOUNTAIN AT SOUTH SIDE OF PARK.
10. ADD NEW POOCH PATH W/ FENCING, SIGNAGE AND STRIPING.
11. REHABILITATE EXISTING TURF FIELD AND UPGRADE EXISTING IRRIGATION SYSTEM.
12. REPAIR EXISTING PLAY EQUIPMENT.
13. ADD NEW JOGGING TRAIL.
14. ADD NEW DROUGHT-TOLERANT LANDSCAPING.
15. ADD NEW PARK SIGNAGE.
16. DEMOLISH OLD EXISTING UNUSED RESTROOM BUILDING.
17. DEMOLISH EXISTING HORSESHOE AREA.
18. DEMOLISH EXISTING SOFTBALL BACKSTOP AND BASES, AND INFIELD.
19. NO STRUCTURAL WORK.
20. NO CHANGE IN USE.

APPLICABLE CODE

2001 CALIFORNIA BUILDING CODE
1997 UNIFORM BUILDING CODE
CULVER CITY MUNICIPAL CODE (CURRENT EDITION)

VICINITY MAP

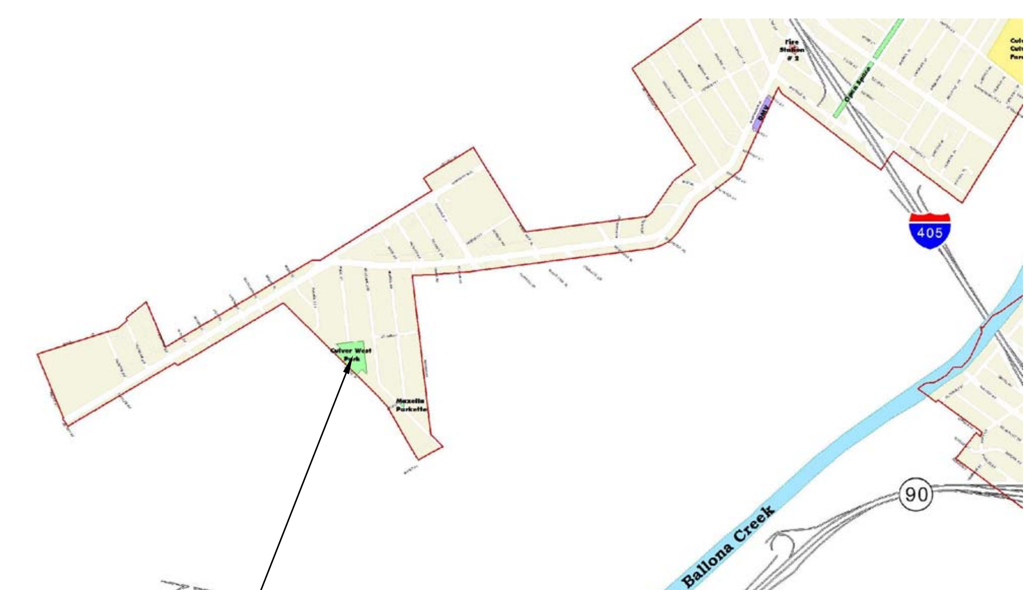

CULVER WEST ALEXANDER PARK

NORTH

DRAWING INDEX

A0.00	PROJECT INFORMATION / NOTES / SPECIFICATIONS
A1.00	SITE PLAN – DEMOLITION
A1.01	SITE PLAN
A1.02	DETAILS
A1.03	PLANTING DESTAILS
A1.04	SIGNS
A1.05	MISCELLANEOUS
L1.00	LANDSCAPE PLAN
L2.00	IRRIGATION PLAN

Project Architect:
Victor M. Weisberg
RTI CONSULTING, INC.
8325 Mc Connell Avenue
Westchester, CA 90045
PH 310.670.5977 FX 310.919.3030
Email: vic.weisberg@rticm.com

Date: Exp Date:

Construction Manager:

RTI

RTI CONSULTING, INC.
8325 McConnell Avenue
Westchester, CA 90045
PH 310.670.5977 FX 310.919.3030
Email: bob.neiwirth@rticm.com

Client:
CITY OF CULVER CITY

Project No:

No.	Date	Description
1	04/26/07	ISSUED TO CLIENT

Project Name:
CULVER WEST ALEXANDER PARK

Project No: CAD File No:

Drawing Title:
PROJECT INFORMATION / NOTES / SPECIFICATIONS

Drawn By: PA Scale: AS NOTED

Drawing No:
A0.00

NOTES . A.100 SITE PLAN – DEMOLITION

1. REMOVE EXISTING AREA DRAINS (SEE MEP DRAWINGS FOR ADDITIONAL INFORMATION).
2. REMOVE (2) EXISTING BBQ GRILLS.
3. MIRRORS ARE TO BE REMOVED AT MEN & WOMEN.
4. HAND DRYERS TO BE REMOVED AT MEN & WOMEN. (TURN OVER TO CITY)
5. REMOVE (E) TOILET PARTITIONS AT BOTH MEN & WOMEN.
6. DEMOLISH EXISTING RESTROOMS AND CONCRETE SLAB..CAP EXISTING UTILITIES UNDERGROUND OR EXTEND AS DIRECTED ON MEP DRAWINGS...REMOVE EXISTING FENCE FROM REAR OF BUILDING TO P.L. FENCE.
7. DEMOLISH EXISTING HORSESHOE COURTS...REMOVE DIRT DOWN TO 6" BELOW GRADE
8. REMOVE MATERIALS AS NECESSARY NEW CURB CUT.
10. REMOVE EXISTING DRINKING FOUNTAIN (SEE MEP DWG. FOR ADDITIONAL INFORMATION)
11. REMOVE EXISTING MENS & WOMANS ROOM DOORS
12. REMOVE EXISTING TREE BRANCHES FROM TREE(S) ON ADJACENT PROPERTY...REMOVAL TO BE AT PROPERTY LINE
13. REMOVE EXIST. BIKE RACK.
14. REMOVE EXISTING ASPHALT TOP SURFACE (SEE SITE PLAN FOR ADDITIONAL INFORMATION).
15. REMOVE (E) SAND, FULL DEPTH.
16. DEMOLISH EXISTING BACKSTOP.
17. REMOVE EXISTING WOOD HEADER AT EDGE OF ASPHALT.
18. REMOVE EXISTING DIRT INFIELD DOWN TO 6" BELOW GRADE
19. REMOVE EXIST. CHAIN LINK FENCE FABRIC AT FENCING SURROUNDING PADDLE TENNIS COURTS.
20. NEW IRRIGATION CONTROLLER. SEE DETAILS 2/A1.03
21. EXIST. BACK FLOW PREVENTER DOUBLE CHECK VALVES, TO REMAIN.
22. REMOVE AND REPLACE PLAY EQUIPMENT.
23. REMOVE EXISTING STEEL BENCH.
24. REMOVE EXISTING ASPHALT.
25. REMOVE EXISTING STEEL POST.

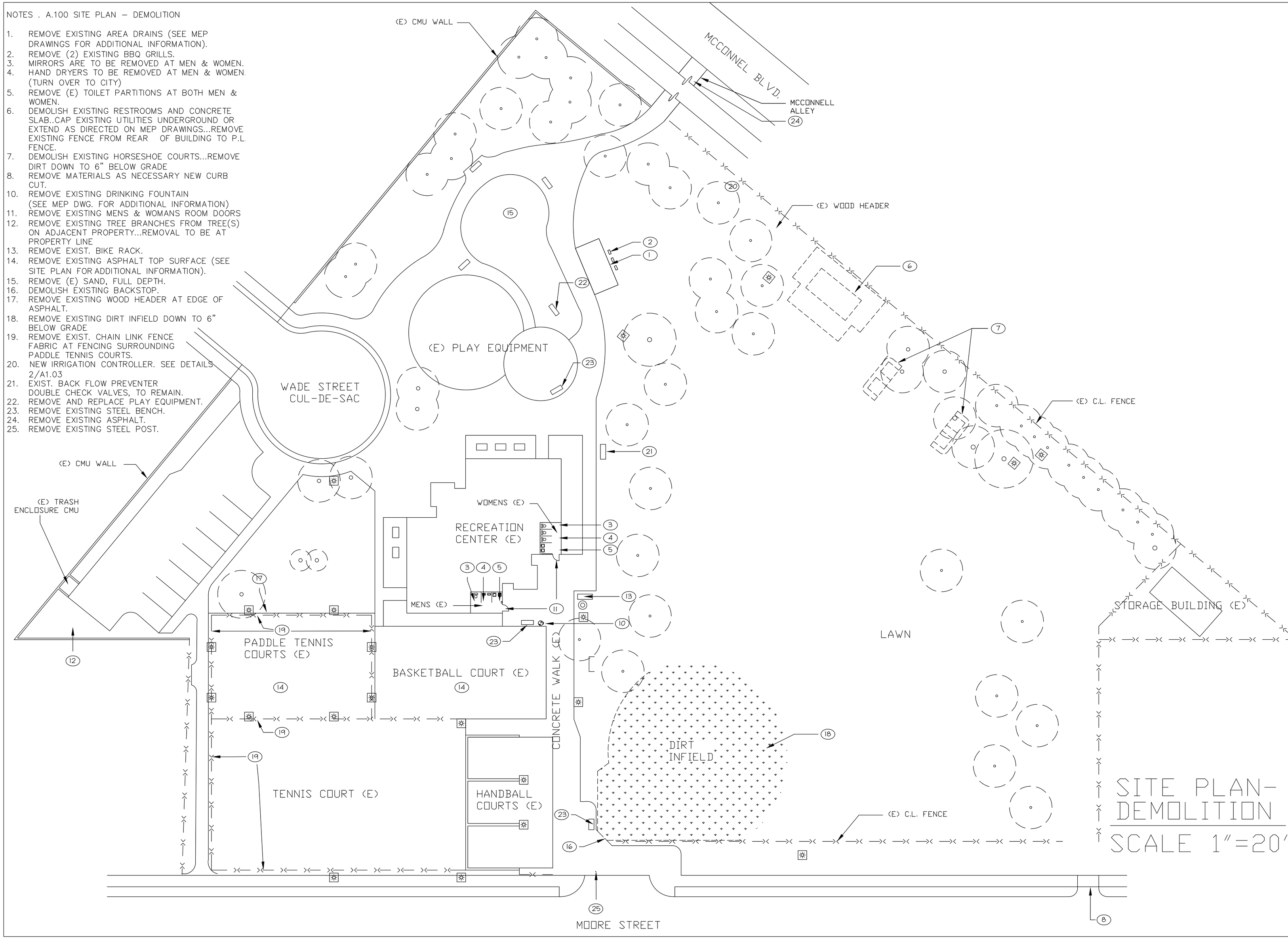

SITE PLAN-DEMOLITION

SCALE 1"=20'

Project Architect:

Victor M. Weisberg
RTI CONSULTING, INC.
8325 Mc Connell Avenue
Westchester, CA 90045
PH 310.670.5977 FX 310.919.3030
Email: vic.weisberg@rticm.com

Date: Exp Date:

Construction Manager:

RTI CONSULTING, INC.
8325 McConnell Avenue
Westchester, CA 90045
PH 310.670.5977 FX 310.919.3030
Email: bob.neiwirth@rticm.com

Client:

CITY OF CULVER CITY

Project No:

No.	Date	Description
1	04/26/07	ISSUED TO CLIENT

Project Name:

CULVER WEST ALEXANDER PARK

Project No: CAD File No:

Drawing Title:

SITE PLAN - DEMOLITION

Drawn By: PA

Scale: AS NOTED

Drawing No:

A1.00

NOTES . A1.01 . SITE PLAN

1. NEW CONCRETE WALK
2. (E) BFP DOUBLE CHECK VALVES
   A. REPAIR WIRE MEASH @ TOP OF (E) BACK FLOW CAGE – WELD TO FRAME.
   B. REMOVE SOIL INSIDE BACK FLOW CAGE, INSTALL 3" CONCRETE SLAB – ALLOW 12" DIAMETER CLEARANCE AROUND PIPES.
3. (E) CONC. SLAB
4. NEW TRENCH DRAIN
5. NEW CONCRETE SLAB.
6. CONNECT @ (E). POST TO REMAIN AFTER BACKSTOP REMOVAL
7. (E) LAWN TO BE RE–SEEDED, INCLUDING FORMER INFIELD.
8. NEW CL FENCE TO MATCH (E) ADJACENT
9. NEW RUBBER PLAY SURFACE TO BE "SPECTRA POUR" RECYCLED RUBBER SAFETY SURFACE AS MANUFACTURED AND INSTALLED BY SPECTRA TURF, CORONA, CA.–CONTACT CHRIS WOLF, 800–875–5788. COLOR: BLACK W/ GREEN SPECKS.
   THICKNESS = 2 $\frac{1}{2}$" SUBBASE SHALL BE 4" MINIMUM LAYER OR AGGREGATE CRUSHED ROCK COMPLETED AND COMPACTED TO A 90% DENSITY RATING AND A $\pm\frac{1}{4}$" LEVEL (10' STRAIGHTEDGE IN ANY DIRECTION). COMPACTION SHALL BE COMPLETED IN TWO 2" LIFTS AFTER THE AREA HAS BEEN SPRAYED. GRADE ENTIRE AREA AT $1\frac{1}{2}$% MINIMUM SLOPE FOR DRAINAGE IN COMPLIANCE W/ EXISTING SITE CONDITIONS. INSTALL A GEOTEXTILE FABRIC OVER THE COMPACTED AND GRADED STONE SUB–BASE. INSTALL "SPECTRA POUR" POURED IN PLACE SYSTEM OVER THE GEOTEXTILE FABRIC MEMBRANE. SEE DETAIL 8/A1.02
10. (E) PLAY SURFACES:
11. (E) & NEW TRASH ENCLOSURES. NEW CMU WALL TO MATCH EXISTING WALL. ADJACENT, EXACT LOCATION TBD. DETAIL 7, A1.03
12. REPLACE POST & NETS @ (2) PADDLE TENNIS COURTS AND (1) TENNIS COURT. PADDLE TENNIS POST SETS TO BE ATA GREEN POST SETS W/ PADDLE TENNIS NETS. TENNIS POST SETS TO BE ATA GREEN TENNIS POST SET W/ EDWARDS 30LS TENNIS NET AND STRAP. ALL POSTS TO COME W/ GROUND SLEEVES AND TENNIS SET TO HAVE CENTER ANCHOR. PADDLE TENNIS POSTS TO BE 23'–0" APART. TENNIS POSTS TO BE 43'–0" APART. SUPPLIERS –NJP SPORTS, INC.; BRAD PERRY, 818–247–3914.
13. NEW CONCRETE CURB CUT. DETAIL 9/A1.02
14. NEW TRAFFIC CONTROL GATE, UPSWUNG BTSW818, 18' LONG WTH END POST AND PAD LOCK. INSTALL PER MFRS INSTRUCTIONS.
15. NEW DOUBLE "U" ADJUSTABLE EXTENSION UNIT WITH MACGREGOR LIFETIME SILVER ALUMINUM BACKBOARD, GOAL AND NET. #BS–5047UBXX BASKETBALL NETS TO BE ANTI–WHIP SETS. FURNISH 20 SETS. SUPPLIERS: BSM SPORTS, 1–800–527–7510
16. SEE "COURT FENCE NOTES", DWG A0.00.
17. SEE "NEW ASPHALT COURT SURFACING NOTES", DWG A0.00.
18. SEE "PARKING LOT PAVING SEALER AND STRIPING WORK" SPECIFICATIONS, DWG. A0.00.
19. NEW CONCRETE WALK AND WALL PAINTING WORK" SPECIFICATIONS DWG A0.00 DETAIL 2/A1.02
20. NEW ENTRANCE ARCH, SEE DETAIL A1.02
21. NEW CONCRETE SURFACE, SEE DETAIL, DWG. A1.02...REMOVE & STORE (E) TABLES & (E) BENCHES FOR NEW CONCRETE INSTALLATION & REINSTALL (E) TABLES & BENCHES ON NEW CONCRETE SURFACE WHERE DIRECTED BY OWNER.
22. SEE "NEW POOCH PATH FENCE NOTES", DWG.A0.00
23. "POOCH PATH"... SEE "POOCH PATH" NOTE, DWG.A0.00
24. NEW DROUGHT TOLERANT DEMONSTRATION GARDEN, SEE LANDSCAPE DWG L1.00.
25. SEE DETAIL 7, DWG. A1.02 FOR NEW WORK RELATED TO THE (E) WOMEN'S & MEN'S RESTROOMS.
26. (E) VENDING MACHINES
27. NEW CONCRETE CURB & MOW STRIP
28. NEW DRINKING FOUNTAIN, HAWS BARRIER FREE PEDESTAL DRINKING FOUNTAIN MODEL 3202G.
29. CONCRETE MOW STRIP AT CENTERLINE OF (E) FENCE POSTS (12"" WIDE)
30. SEE TENNIS, HANDBALL, PADDLE TENNIS AND BASKETBALL COURTS RESURFACING NOTES, DWG. A0.00
31. SEE HANDBALL COURTS WALL PAINTING NOTE, DWG. A0.00
32. NEW PARK SIGN SEE DETAIL, DWG. A1.02
33. AREA DRAIN.
34. NEW TRAFFIC CONTROL GATE, UPSWUNG BTSW818, 9' LONG WITH END POST AND PAD LOCK. INSTALL PER MANUFACTURERS INSTRUCTIONS, SEE DETAIL, DWG. A1.02
35. JOGGING TRAIL, SEE DETAIL 3, DWG. A1.02
36. NEW POOCH PATH SIGN.
37. STEAM CLEAN ALL EXISTING PLAY EQUIPMENT.
38. PAINT EXISTING STEEL FENCE AROUND TOT LOT BLACK & ADD STEEL CAPS TO FENCE POST.
39. ADD NEW 36" BLACK W.I. FENCE AND GATE WITH LOCK.
40. NEW LANDSCAPE STRUCTURES BIKE LOOP RACK #100102A–B WITH BLUE TENDER TUFF COATING.
41. ADD 2" LAYER OF MULCH (ROCKY CLOD WOOD CHIPS) TO ALL AREAS EAST OF JOG PATH, SOUTH OF PARK & WEST OF TENNIS COURT & NEW DROUGHT TOLORANT GARDEN.
42. NEW CONCRETE SLAB & BENCH. SLAB 5' X 10' X 4" THICK.
43. NEW CONCRETE SLAB & TABLE. SLAB 5' X 10' X 4" THICK.
44. RE–LOCATE EXISTING CONCRETE TABLE TO SOUTH.
45. IMPROVEMENTS TO (E) STORAGE BUILDING. SEE DETAIL #6, DWG. A1.02
46. RAISE (E) ELECTRICAL BOX TO GRADE.
47. (NUMBER NOT USE)
48. NEW PLAY EQUIPMENT
49. NEW PICNIC SCHEDULE SCHEDULE SIGN. ROATATING TUBE SIGN SIMILAR TO TRANSIT INFORMATION PRODUCTS (CONCORD, CA: 877–676–8900) ROTATING TRANSIT TUBE SIGN. MOUNT SIGN ON 3" DIAMETER GALVANIZED STEEL POLE (PAINT BLACK). TOP OF POLE TO BE 6'–0" ABOVE GROUND AND EXTENDING INTO GROUND 2'–6" DEEP WITH 1'–0" DIAMETER X 3'–0" DEEP CONCRETE FOOTING.

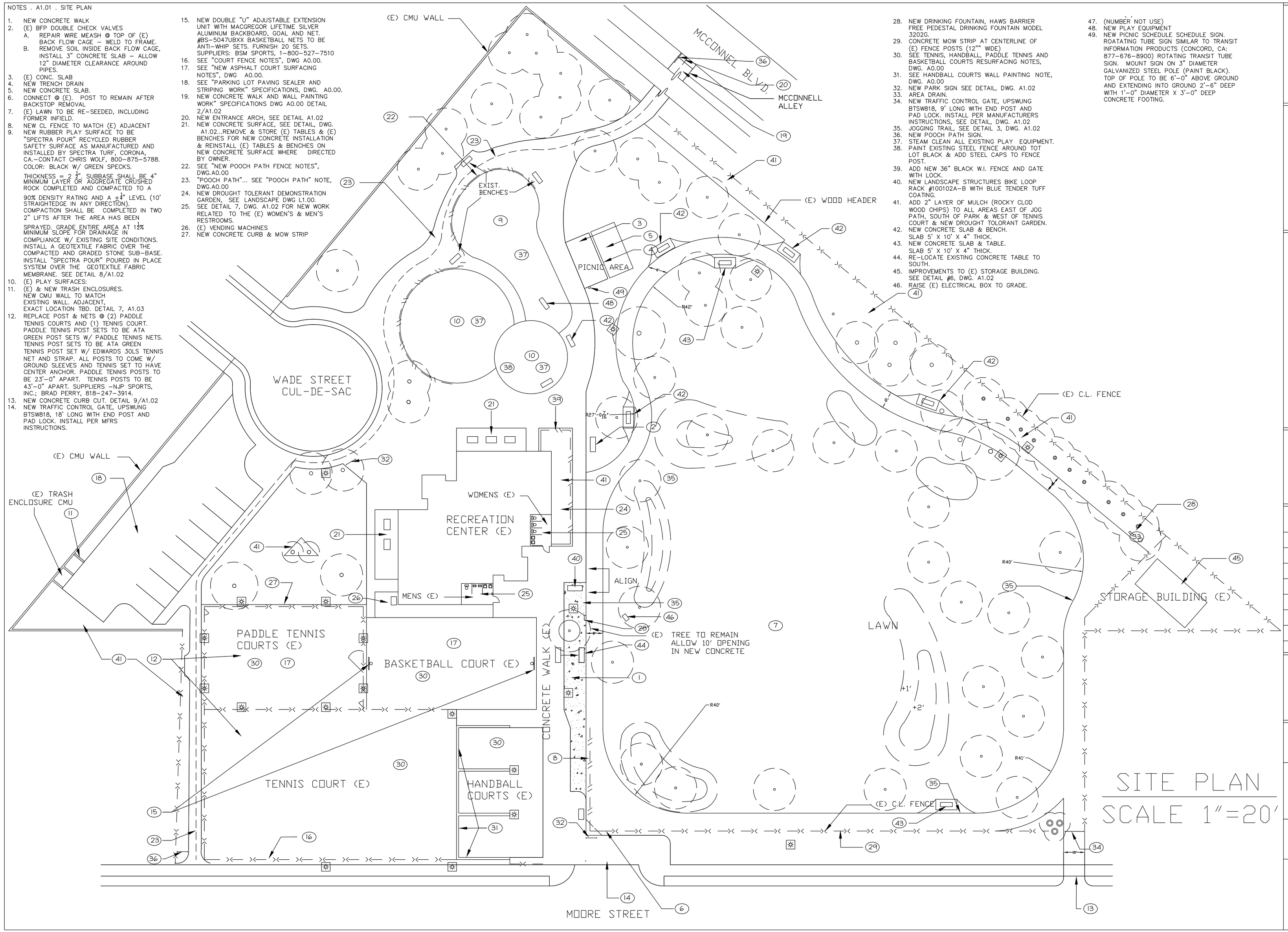

SITE PLAN
SCALE 1"=20'

Project Architect:
Victor M. Weisberg
RTI CONSULTING, INC.
8325 Mc Connell Avenue
Westchester, CA 90045
PH 310.670.5977 FX 310.919.3030
Email: vic.weisberg@rticm.com

Date: Exp Date:

Construction Manager:

RTI CONSULTING, INC.
8325 McConnell Avenue
Westchester, CA 90045
PH 310.670.5977 FX 310.919.3030
Email: bob.neiwirth@rticm.com

Client:
CITY OF CULVER CITY

Project No:

No.	Date	Description
1	04/26/07	ISSUED TO CLIENT

Project Name:
CULVER WEST ALEXANDER PARK

Project No: CAD File No:

Drawing Title:
SITE PLAN

Drawn By: PA
Scale: AS NOTED

Drawing No:
A1.01

STABILIZED DECOMPOSED GRANITE SURFACE SPECIFICATION

PART 1: GENERAL

1.1 SCOPE OF WORK
A. WORK INCLUDED IN THIS SECTION.
1. DECOMPOSED GRANITE PAVING WITH BINDER ADDITIVE.

1.2 SYSTEM DESCRIPTION
A. DECOMPOSED GRANITE.

1.3 SUBMITTALS
A. PRODUCTS; FIVE LB SAMPLE AND SIEVE ANALYSIS FOR GRADING OF DECOMPOSED GRANITE.

1.4 TESTS
A. PERFORM GRADATION OF DECOMPOSED GRANITE MATERIAL IN ACCORDANCE WITH ASTM C 136 – METHOD FOR SIEVE ANALYSIS FOR FINE AND COURSE.

1.5 MOCK–UPS
A. INSTALL 4 FT. WIDE X 10 FT LONG MOCK UPS OF DECOMPOSED GRANITE PAVING WITH ADDITIVE AT LOCATION AS DIRECTED BY OWNER'S REPRESENTATIVE.

1.6 ENVIRONMENTAL CONDITIONS
A. DO NOT INSTALL DECOMPOSED GRANITE PAVING DURING RAINY CONDITIONS.

1.7 QUALITY ASSURANCE
A. INSTALLER PROVIDE EVIDENCE TO INDICATE SUCCESFUL EXPERIENCE IN PROVIDING DECOMPOSED GRANITE PAVING CONTAINING BINDER ADDITIVE.

1.8 EXCESS MATERIALS
A. PROVIDE OWNER'S AUTHORIZATION REP[. WITH THE FOLLOWING EXCESS MATERIALS FOR USE IN FUTURE DECOMPOSED GRANITE OR ⅜"OR ¼"CRUSHED AGGREGATE PAVING REPAIR (10) 40–50 LB BAGS OF THE AGGREGATE PAVING 1 – 40 LB BAG OF THE ADDITIVE.

PART 2: PRODUCTS

2.1 DECOMPOSED GRANITE SCREENINGS
A. CRUSHED STONE SIEVE ANALYSIS PERCENTAGE OF WEIGHT PASSING
A. SQUARE MESH SIEVE AASHTO T11–82 AND T27–82

1/4" MINUS AGGREGATE GRADATION

SIEVE DESIGNATION	RANGE OF % PASSING
3/8"	100
NO. 4	95–100
NO. 8	75–80
NO. 16	55–65
NO. 30	40–50
NO. 50	25–35
NO. 100	20–25
NO. 200	5–15

B. ACCEPTABLE LOCAL SUPPLIER – CONTRACTOR TO SUBMIT FOR APPROVAL.

2.2 BINDER
A. NON TOXIC, ORGANIC BINDER THAT IS COLORLESS AND ODORLESS CONCENTRATED POWDER THAT BINDS DECOMPOSED GRANITE TOGETHER TO PRODUCE A FIRM SURFACE.

B. BINDER STABILIZER SOLUTIONS, INC. 1800–336–2468, OR APPROVED EQUAL.

PART 3: EXECUTION

3.1 BLENDING STABILIZER
A. BLEND 12–15 LBS OF BINDER PER TON OF DECOMPOSED GRANITE SCREENINGS. IT IS CRITICAL THAT THE BINDER BE THOROUGHLY AND UNIFORMLY MIXED THROUGHOUT DECOMPOSED GRANITE SCREENINGS.

3.2 PLACEMENT OF DECOMPOSED GRANITE SCREENINGS
A. UPON THROUGHOUT MOISTURE PENETRATION, COMPACT AGGREGATE SCREENINGS TO 95% RELATIVE COMACTION BY COMPACTION EQUIPMENT SUCH AS; DOUBLE DRUM ROLLER (2–4 TON) OR SINGLE DRUM ROLLER (1000 LBS) VIBRATORY PLATE LAMP. DO NOT BEGIN COMACTION FOR 6 HOURSE AFTER PLACEMENT AND UP TO 48 HOURS. MAXIMUM DEPTH OF EACH PLACEMENT SHALL BE 1–1/2". TOTAL DEPTH TO BE 3'.

B. TAKE CARE IN COMPACTING DECOMPOSED GRANITESCREENINGS WHEN ADJACENT TO PLANTING AND IRRIGATION SYSTEMS

3.3 REPAIRS AND PROTECTION
A. REMOVE AND REPLACE DECOMPOSED GRANITE PAVING THAT IS DAMAMGED, DEFECTIVE OR DOES NOT MEET REQUIREMENTS OF THIS SECTION.

11 STABILIZED DECOMPOSED GRANITE SPECIFICATIONS
NO SCALE

PARK TURF FIELD RENOVATON

SPECIFICATIONS

1. SPRAY ENTIRE TURF AREA WITH "SPEED ZONE" MANUFACTURED BY BASF TO ERADICATE BROADLEAF AND CLOVER.
2. SPRAY ENTIRE TURF AREA WITH "MSMA", MANUFACTURED BY ORTHO, TO ERADICATE CRAB GRASS, GOOSE GRASS AND NUTSEDGE.
3. AERIFY ENTIRE TURF AREA USING A SELF PROPELLED AERIFIER MACHINE WITH STANDARD 6" DEEP HOLES AT 1" OC–⅜" DIAMETER HOLLOW TINES, AND REMOVE CORES.
4. PLANT ENTIRE TURF AREA WITH WHITTET KIKUYU GRASS SEED APPLIED AT 25 LB./AC FROM STOVER SEED COMPANY. CONTACT JAMES CULLEY AT 1–800–621–0315.
5. COVER ENTIRE TURF AREA WITH 1" LAYER OF "TOPPER" (NITROLIZED REDWOOD COMPOST) FROM RECYCLED WOOD PRODUCTS. CONTACT PAT COLLINS AT 909–868–6882.
6. TURF ESTABLISHMENT PERIOD (45 DAYS) BEGINNING WHEN GRASS SEED IS PLANTED.
7. SEED SHALL NOT BE PLANTED UNTIL IRRIGATION SYSTEM IS OPERATING WITH COMPLETE COVERAGE.
8. SEED SHALL BE KEPT MOIST THROUGH GERMINATION, THEN IRRIGATED TO ENCOURAGE PROPER GROWTH THROUGH TURF ESTABLISHMENT PERIOD.
9. NEW GRASS SHALL BE MOWED 3–4 WEEKS AFTER GERMINATION AND ONCE MORE AT END OF TURF ESTABLISHMENT PERIOD.
10. TEMPORARY C.L. FENCE SHALL BE INSTALLED AROUND ENTIRE TURF FIELD FOR TURF ESTABLISHEMNT PERIOD (45 DAYS).

10 PARK TURF FIELD RENOVATIONS
NO SCALE

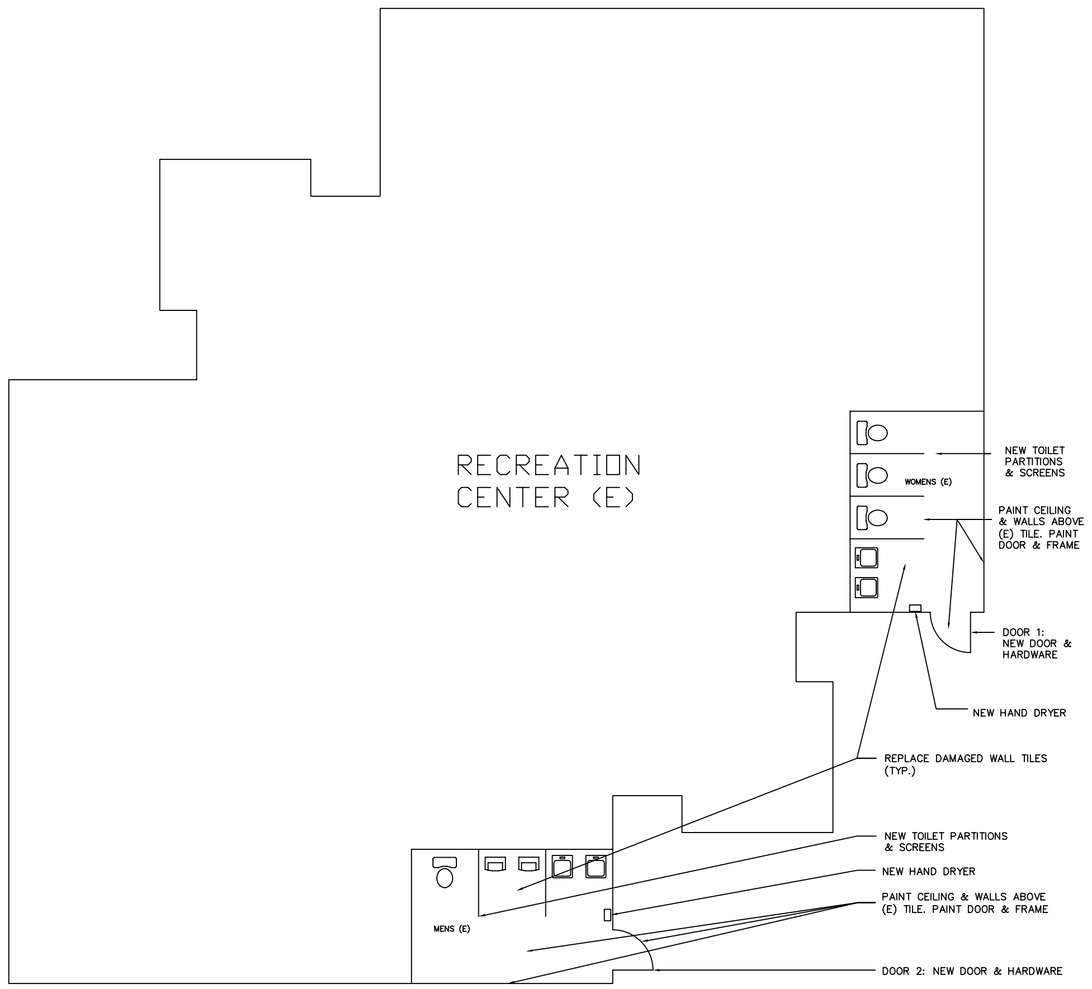

NEW WORK
NOTE: EXISTING TOILET FIXTURES TO REMAIN

DOOR 1:
NEW 1 3/4" THICK HM DOOR X EXIST HM FRAME. (BONDO & ALTER FRAME AS NECESSARY TO RECEIVE NEW HARDWARE)...RHR

PULL – HAGER H34G X 3 ½" X 15" US32D.

PUSH – HAGER 80S X 3 ½" X 15 X US32D

BUTTS – STANLEY FBB 168 4 ½" X 4 ½" X NRP X USP

CLOSER – LCN 4041 SERIES X PA X MC X HO X US32D

SURFACE MOUNTED SLIDE BOLT – SUGATSUME SSG–85 X US32D

PADLOCK
– BEST 21B72L X US32D X WC X BEST 7 PIN CYLINDER
KICKPLATE – HAGER 10"H X US32D

DOOR 2:
SAME AS DOOR 1 EXCEPT LHR

DOORS TO BE FLUSH DOORS, 16 GAUGE HONEYCOMB CORE

NEW TOILET PARTITIONS TO BE SANTANA SOLID PLASTIC FLOOR MOUNTED OVERHEAD BRACED PARTITIONS. LOCATED AT LOCATIONS OF PRESENT TOILET PARTITIONS TO BE REMOVED. NEW URINAL SCREEN TO BE SANTANA SOLID PLASTIC FLOOR MOUNTED OVERHEAD BRACED SCREEN, BRACED TO BACK WALL AND TO ADJACENT TOILET PARTITION AND TO BE LOCATED WHERE PRESENT URINAL SCREEN IS LOCATED. FABRICATION AND INSTALLATION TO BE PER MANUFACTURER'S STANDARDS AND RECOMMENDATIONS. COLOR: BLACK PAISLEY 090. SUBMIT SHOP DRAWINGS ((4) SETS) AND COLOR SAMPLE ((3) SAMPLES) FOR APPROVAL BY ARCHITECT.

PAINT NOTES
DOORS AND FRAMES TO BE PAINTED TWO COATS MINIMUM BENJAMIN MOORE MOOR CRAFT SUPER SPEC. D.T.M. ALKYD SEMI–GLOSS ENAMEL Z24 GRAFITTI COATING TO WALLS

WALLS AND CEILINGS TO BE PAINTED TWO COATS MINIMUM BENJAMIN MOORE MOORCRAFT SPEC ACRYLIC EPOXY COATING 256.

SURFACE PREPARATION AND PAINT APPLICATION TO BE IN STRICT ACCORDANCE W/ MANUFACTURER'S PRINTED INSTRUCTIONS.

COLORS TO BE DETERMINED.

ANTI GRAFFITI COATING
UPON CURING OF PAINT ON WALLS, APPLY "ND GRAFFITI SHIELD" TWO–PART FINISH SYSTEM AS MFG. BY NEW DIMENSIONS SOLUTIONS LLC, (800) 731–2231

HAND DRYER NOTES
BOBRICK #B–700, 115V, SURFACE MOUNTED AUTOMATIC HAND DRYER. ONE FOR MENS AND WOMENS BATHROOMS. CONNECT TO EXISTING POWER OUTLETS.

7 MEN & WOMENS BATHROOM PLANS & NOTES
1/8" = 1'-0"

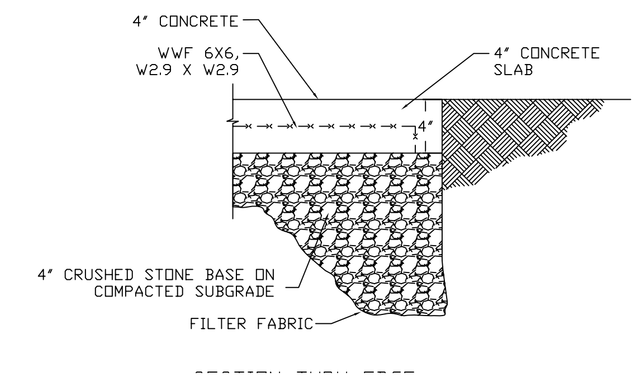

4 SECTION THRU EDGE & FAMILY PICNIC AREA
1-1/2" = 1'-0"

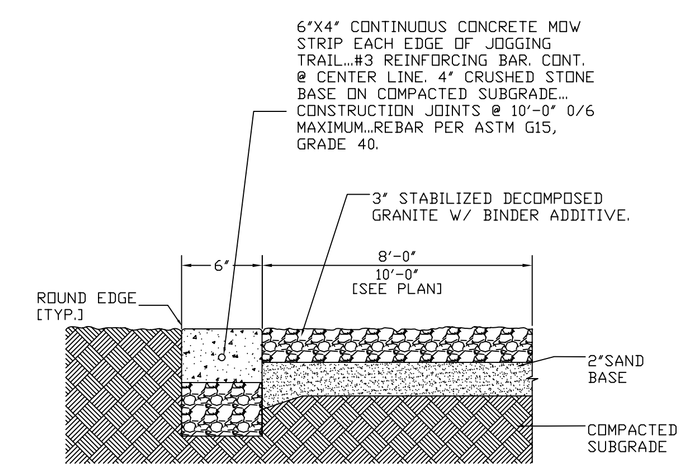

3 SECTION THRU JOGGING TRAIL
1-1/2" = 1'-0"

NOTES:

1. CURB CUT SHALL BE 6" CONCRETE WITH WWF 6X6, W2.9 X W2.9
2. CURB FOR TYPE C DRIVEWAY SHALL BE INTRGRAL AND MATCH ADJACENT CONSTRUCTION.

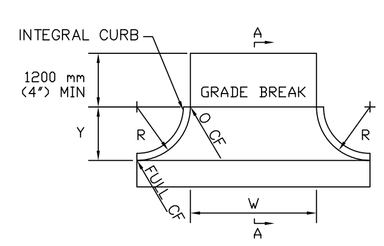

9 CURB CUT DETAIL
1-1/2" = 1'-0"

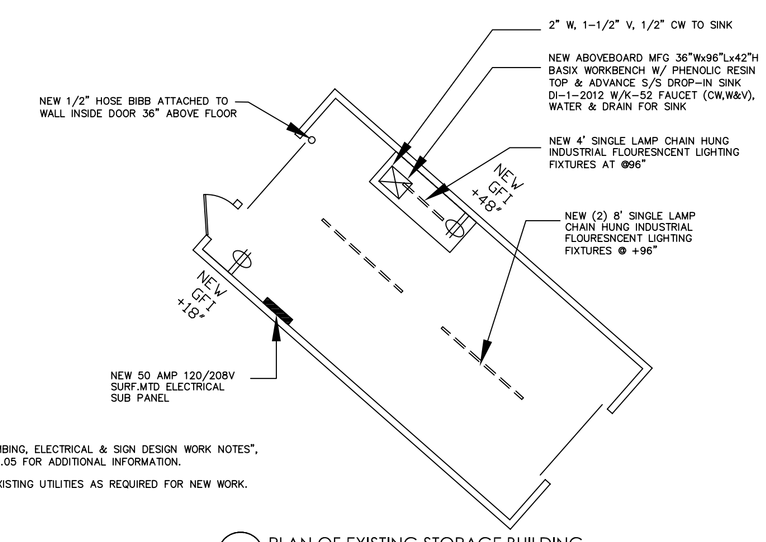

NOTES:

SEE "PLUMBING, ELECTRICAL & SIGN DESIGN WORK NOTES", DWG. 1/A1.05 FOR ADDITIONAL INFORMATION.

EXTEND EXISTING UTILITIES AS REQUIRED FOR NEW WORK.

6 PLAN OF EXISTING STORAGE BUILDING
1/8" = 1'-0"

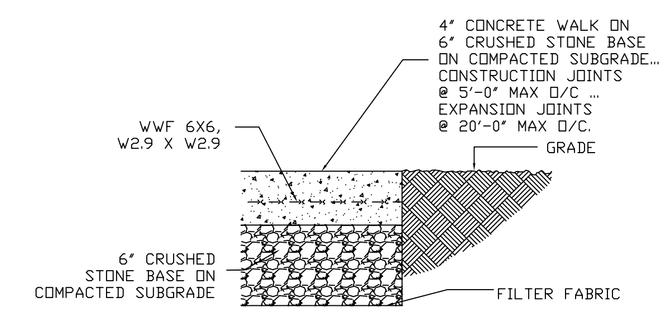

2 SECTION THRU CONCRETE WALKS & PADS
1-1/2" = 1'-0"

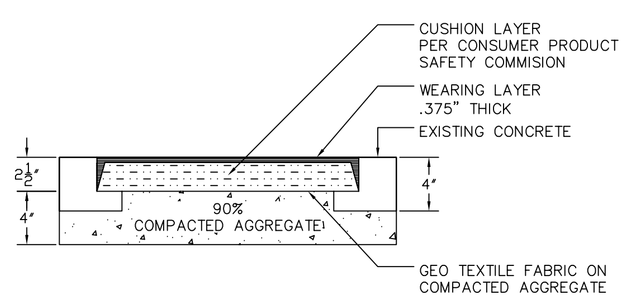

8 SPECTRA POUR SURFACING DETAIL
1-1/2" = 1'-0"

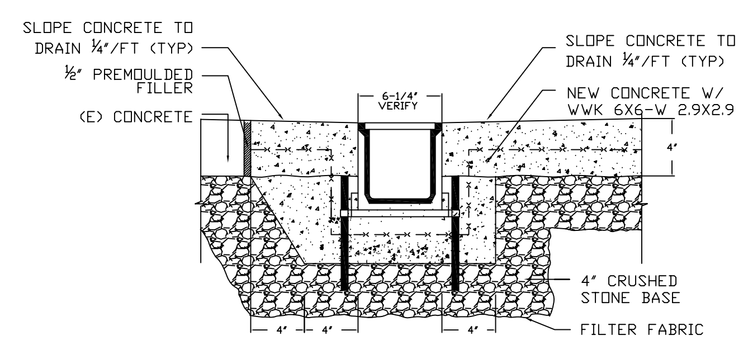

5 SECTION THRU NEW TRENCH DRAIN AT FAMILY PICNIC AREA
1-1/2" = 1'-0"

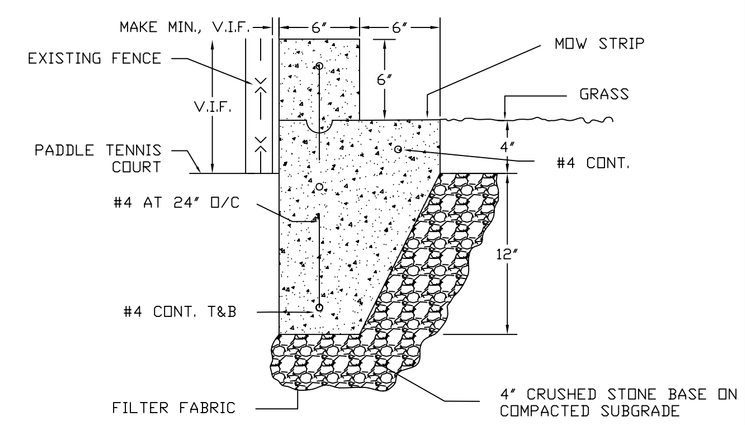

1 SECTION THRU CURB @ PADDLE TENNIS COURTS
1-1/2" = 1'-0"

Project Architect:
Victor M. Weisberg
RTI CONSULTING, INC.
8325 Mc Connell Avenue
Westchester, CA 90045
PH 310.670.5977 FX 310.919.3030
Email: vic.weisberg@rticm.com

Date: Exp Date:

Construction Manager:

RTI CONSULTING, INC.
8325 McConnell Avenue
Westchester, CA 90045
PH 310.670.5977 FX 310.919.3030
Email: bob.neiwirth@rticm.com

Client:
CITY OF CULVER CITY

Project No:

No.	Date	Description
1	04/26/07	ISSUED TO CLIENT

Project Name:
CULVER WEST ALEXANDER PARK

Project No: CAD File No:

Drawing Title:
DETAILS

Drawn By: PA
Scale: AS NOTED

Drawing No:
A1.02

8

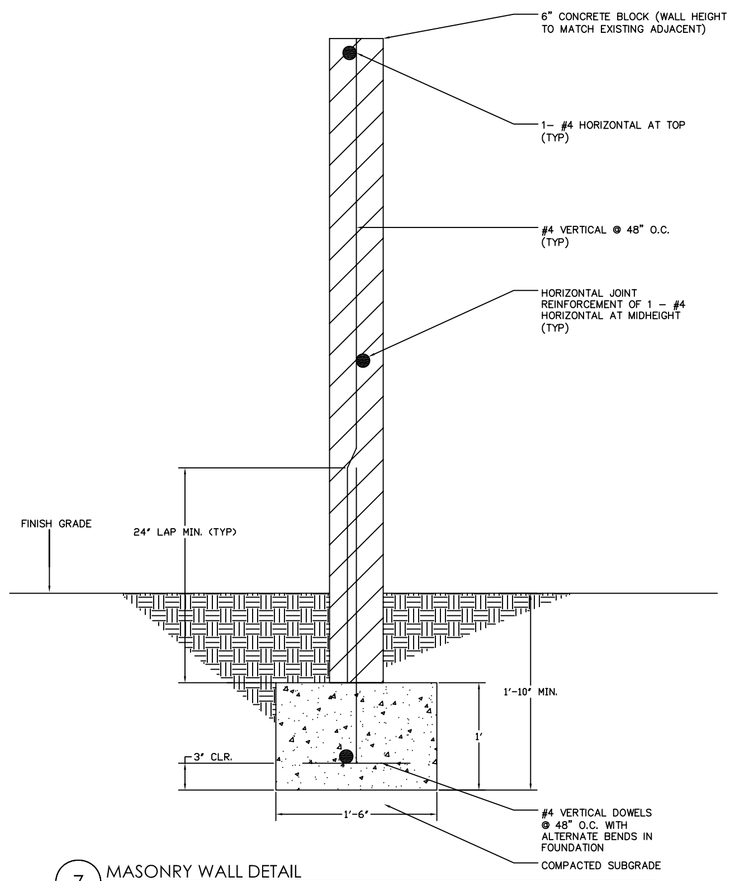

7 MASONRY WALL DETAIL
NO SCALE

1. INSTALL REMOTE CONTROL VALVES WITHIN 12" OF PAVING.
2. COMMON CONTROL WIRES SHALL BE BELOW MAINLINE.
3. PLASTIC VALVE BOX SHALL BE 18" x 12" WITH LOCKING COVER.
4. BURN REMOTE CONTROL VALVE#_INTO LID, 2" HIGH.
5. COMMON & CONTROL WIRES SHALL BE TAPED TOGETHER @ 10' INTERVALS–DO NOT FASTEN TO MAINLINE.

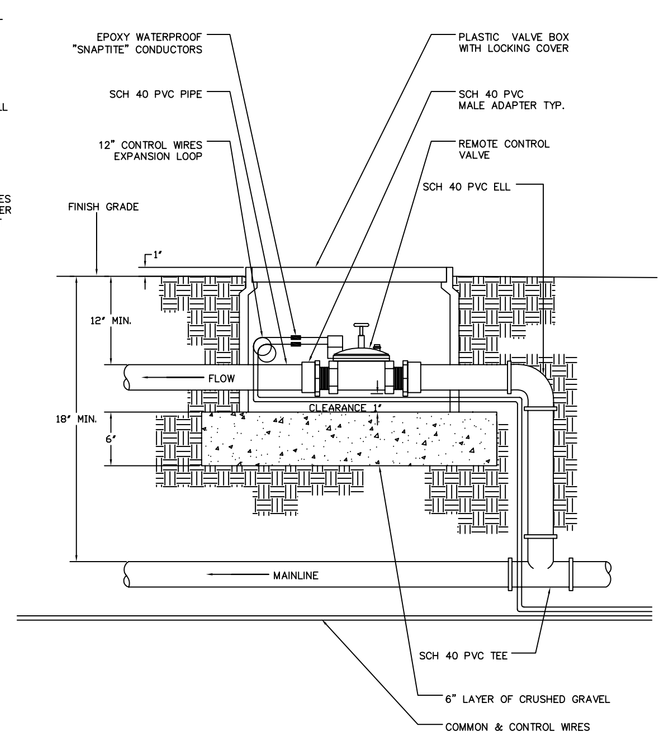

7 REMOTE CONTROL VALVE & MASTER VALVE INSTALLATION DETAIL
NO SCALE

6

NOTES:

1. 2 1/2" GATE VALVE OR SMALLER TO BE TEATHED 3" GATE VALVE OR ABOVE TO BE FLANGE VALVE

2. ALL VALVES TO BE RISING STEM, SOLID WEDGE, BLOCK PATTERN, AND SCREW-IN-BONNET

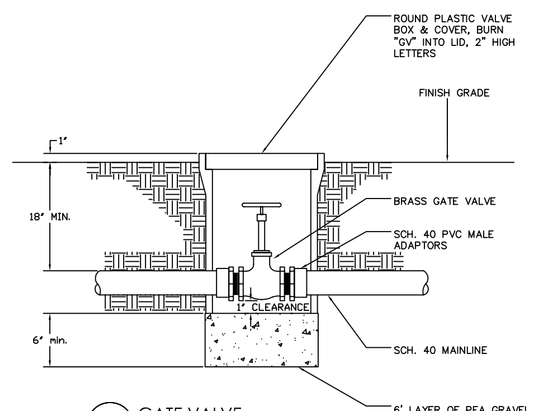

5 GATE VALVE
NO SCALE

NOTES:

1. LOCATE HEAD 2" FROM WALKS, CURB, MOW STRIP, HEADER BOARD AND EDGE OF LAWN

2. LOCATE 6" FROM ALL STRUCTURES

3. USE TEFLON TAPE ON ALL MALE THREADS.

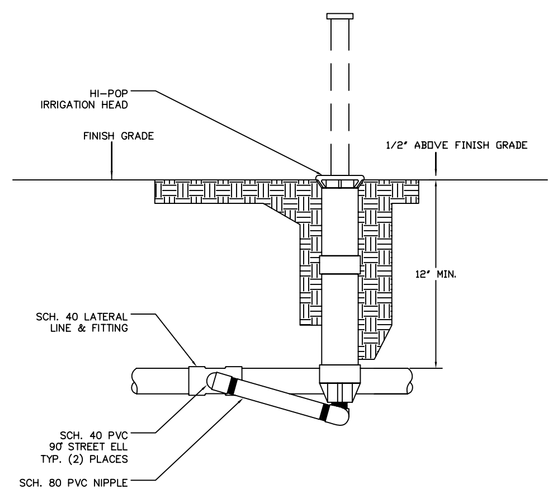

4 HI-POP IRRIGATION HEAD
NO SCALE

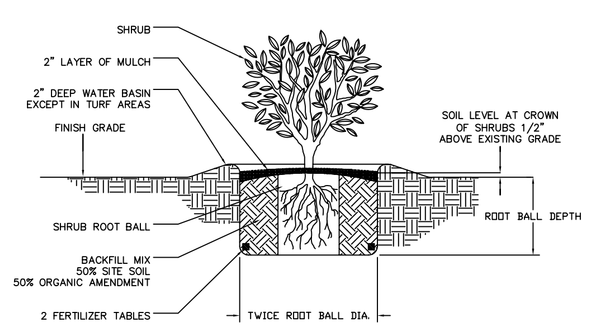

3 SHRUB PLANTING DETAIL
NO SCALE

NOTES:
1. CONTRACTOR TO GROUND AND PROVIDE SURGE PROTECTION FOR FIELD UNIT IN ACCORDANCE W/MANUFACTURER RECCOMENDATION AND GROUND ROD(S) SHOWN. CONTRACTOR TO SET UP A SAMPLE PEDESTAL FOR CONSULTANT REVIEW AND APPROVAL PRIOR TO INSTALLING BALANCE OF FIELD UNITS. INSTALL A 30 AMP FUSE AND A 120V DUPLEX RECEPTACLE INSIDE PEDESTAL. ALL ELECTRICAL TO CONFORM W/LOCAL CODE

1. 16" TOP ENTRY STAINLESS STEEL CONTROLLER ENCLOSURE (NEMA 3R RAINPROOF ENCLOSURE – UL LISTED) SECURED TO CONCRETE FOOTING W/GALVANIZED J BOLTS (TYP. 2 PLACES)
2. CALSENSE ET200 CONTROLLER W/RAIN–SHUTOFF DEVICE & RADIO REMOTE (SEE IRRIGATION EQUIPMENT LEGEND FOR SIZE SPECIFICATION)
3. POWER SWITCH/GFI RECEPTICLE
4. ALL WIRES TO BE SECURELY TIED INSIDE ENCLOSURE
5. 2" LAYER OF CRUSHED GRAVEL
6. AUTOMATIC RAIN/FREEZE SHUTOFF MOUNTED AND CONNECTED PER MANUFACTURER'S RECCOMENDATION. MODEL NO. WCS–4 WIRE RAIN SWITCH
7. INTERNAL GROUNDING ROD INSTALLED IN CONTROLLER ASSEMBLY BY MANUFACTURER
8. 1 COMMON WIRE TO ALL R.C.V.'S 1 CONTROL WIRE TO EACH R.C.V.
9. 3" PVC SWEEP ELBOW AND CONDUIT FOR CONTROL WIRES.
10. 4" X 6" CONCRETE FOOTING W/ENCLOSURE ATTACHED PER MANUFACTUER'S RECOMENDATION
11. 1" PVC CONDUIT FOR 120 VAC ELECTRICAL (INDEPENDANT SERVICE PROVIDED BY ELECTRICAL CONTRACTOR)
12. 1–1/4" PVC CONDUIT FOR COMMUNICATION CABLE TO SATELITE ASSEMBLY. (IF REQUIRED)
13. 1–1/4" PVC CONDUIT FOR FLOW SENSOR CABLE
14. FINISH GRADE

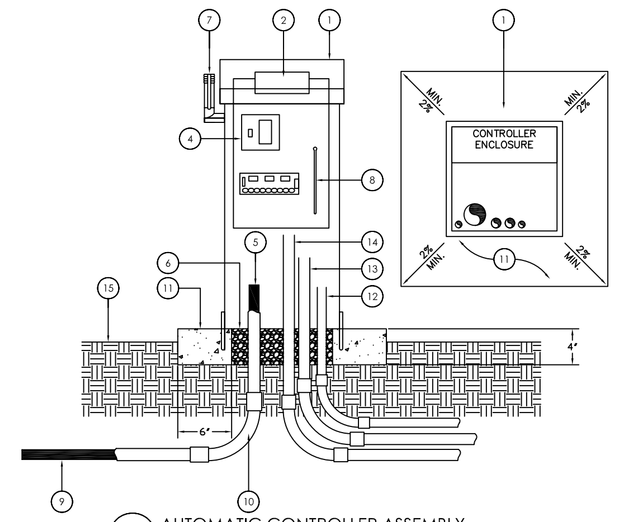

2 AUTOMATIC CONTROLLER ASSEMBLY
NO SCALE

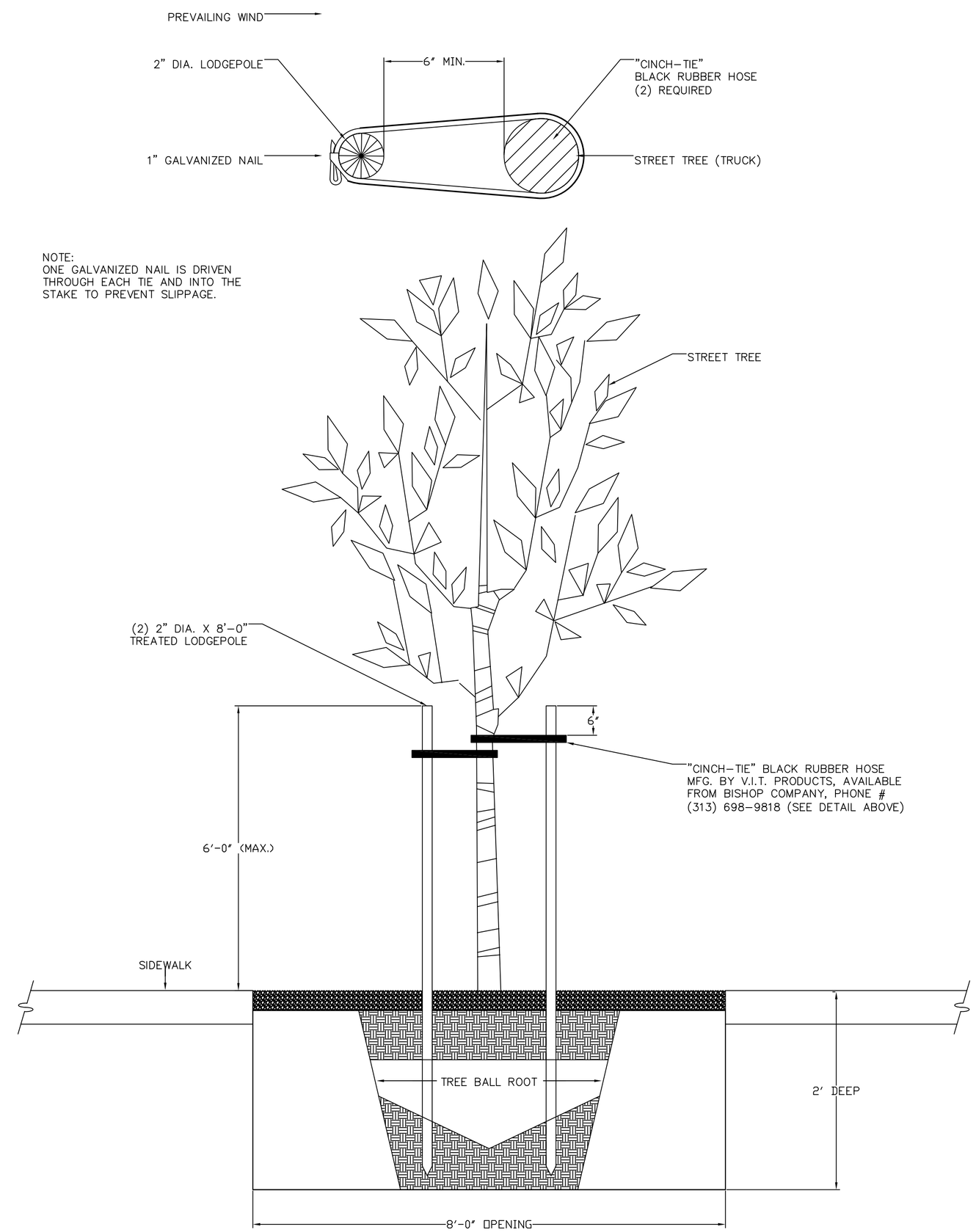

NOTE:
ONE GALVANIZED NAIL IS DRIVEN THROUGH EACH TIE AND INTO THE STAKE TO PREVENT SLIPPAGE.

1 TREE PLANTING DETAIL
NO SCALE

Project Architect:
Victor M. Weisberg
RTI CONSULTING, INC.
8325 Mc Connell Avenue
Westchester, CA 90045
PH 310.670.5977 FX 310.919.3030
Email: vic.weisberg@rticm.com

Date: Exp Date:

Construction Manager:

RTI CONSULTING, INC.
8325 McConnell Avenue
Westchester, CA 90045
PH 310.670.5977 FX 310.919.3030
Email: bob.neiwirth@rticm.com

Client:
CITY OF CULVER CITY

Project No:

No.	Date	Description
1	04/26/07	ISSUED TO CLIENT

Project Name:
CULVER WEST ALEXANDER PARK

Project No: CAD File No:

Drawing Title:
DETAILS

Drawn By: PA
Scale: AS NOTED

Drawing No:
A1.03

1. ALUMINUM SIGN WITH WHITE BACKGROUND & BLACK LETTERS.
2. SECURE TO BUILDING WALL WITH PLASTIC WALL ANCHORS & 1" STAINLESS STEEL SCREWS.

DROUGHT TOLORANT LANDSCAPE

THIS GARDEN IS DESIGNED TO REDUCE & CONSERVE WATER USE

3

LANDSCAPE YOUR YARD WITH DROUGHT TOLORANT PLANTS - THE PLANTS IN THIS GARDEN ONLY REQUIRE WATER ONCE A WEEK - NO WATER IF IT RAINS. PLEASE NOTE THE NAME OF EACH PLANT.

DROUGHT TOLORANT LANDSCAPE

THIS GARDEN IS DESIGNED TO REDUCE & CONSERVE WATER USE

2

ADD 2 INCH LAYER OF MULCH OVER YOUR ENTIRE GARDEN - THIS PROVIDES INSULATION FROM SUN & HEAT TO CONSERVE WATER IN THE GROUND - IT ALSO DISCORAGES WEED GROWTH.

1–1/2" LETTERS
3/4" LETTERS
1–1/2" NUMBER
1" LETTERS (TYP.)

DROUGHT TOLORANT LANDSCAPE

THIS GARDEN IS DESIGNED TO REDUCE & CONSERVE WATER USE

PLEASE USE THE 3 FOLLOWING IDEAS TO SAVE WATER USED FOR LANDSCAPING IN YOUR YARD.

1

THE BEST TIME TO WATER YOUR PLANTS IS EARLY IN THE MORNING - JUST BEFORE SUNRISE - LATER, WATER IS LOST DUE TO EVAPORATION.

2′
2′–6″

6 NEW DROUGHT TOLORANT LANDSCAPE SIGNS (3) REQUIRED
3″ = 1′-0″

1. ALUMINUM SIGN WITH WHITE BACKGROUND & BLACK LETTERS.
2. SECURE TO (2) GALVANIZED STEEL ANGLES 18" LONG USING STAINLESS STEEL SCREWS.
3. SEE LANDSCAPE LEGEND, DWG. L100 FOR PLANT NAMES

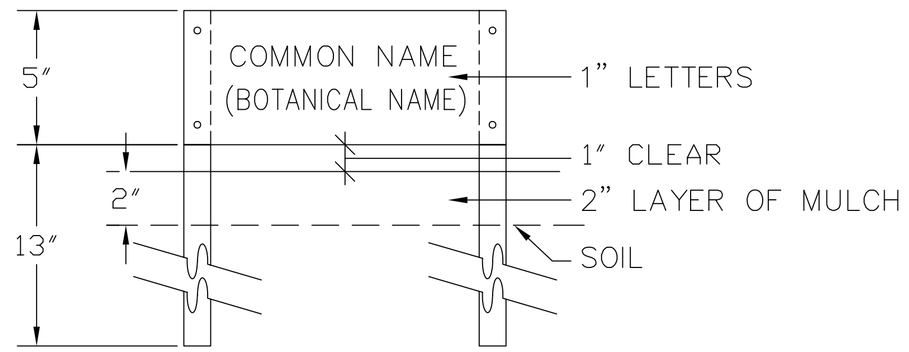

5 PLANT NAME SIGNS (15) REQUIRED
3″ = 1′-0″

POOCH PATH

DOGS - ON LEACH - MAY FOLLOW THE PAW PRINTS THRU THE PARK.
PLEASE STAY ON PATH ONLY.
DOGS ARE NOT ALLOWED IN ANY OTHER AREA OF THE PARK

POOCH PATH
1–1/2" LETTERS
1" LETTERS

4 NEW "POOCH PATH" SIGN TEXT
3″ = 1′-0″

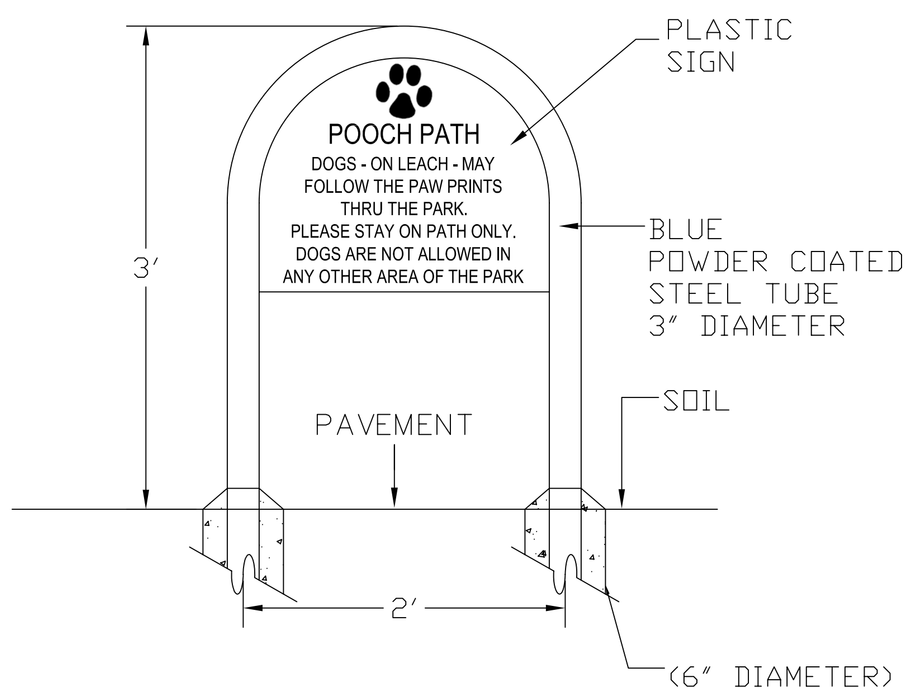

3 NEW "POOCH PATH" SIGN (2 LOCATIONS)
1-1/2″ = 1′-0″

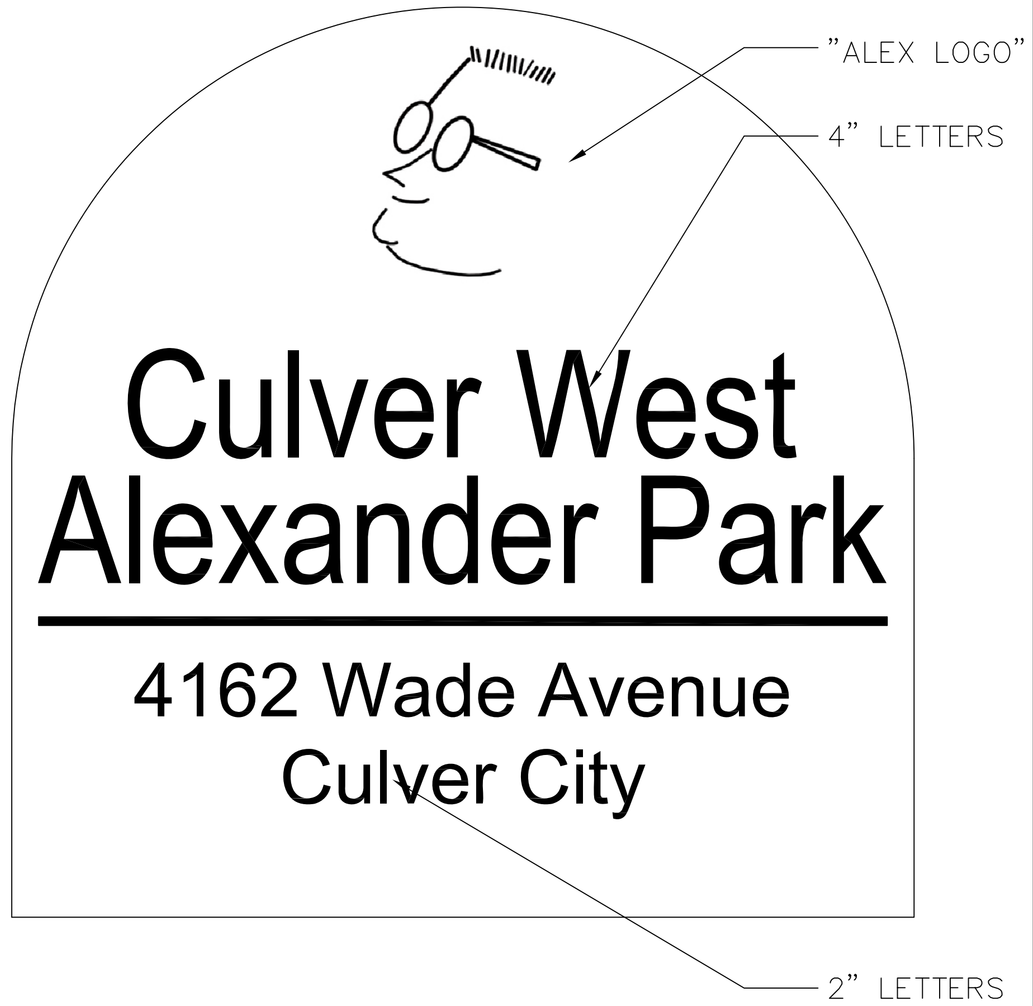

2 NEW PARK SIGN TEXT
3″ = 1′-0″

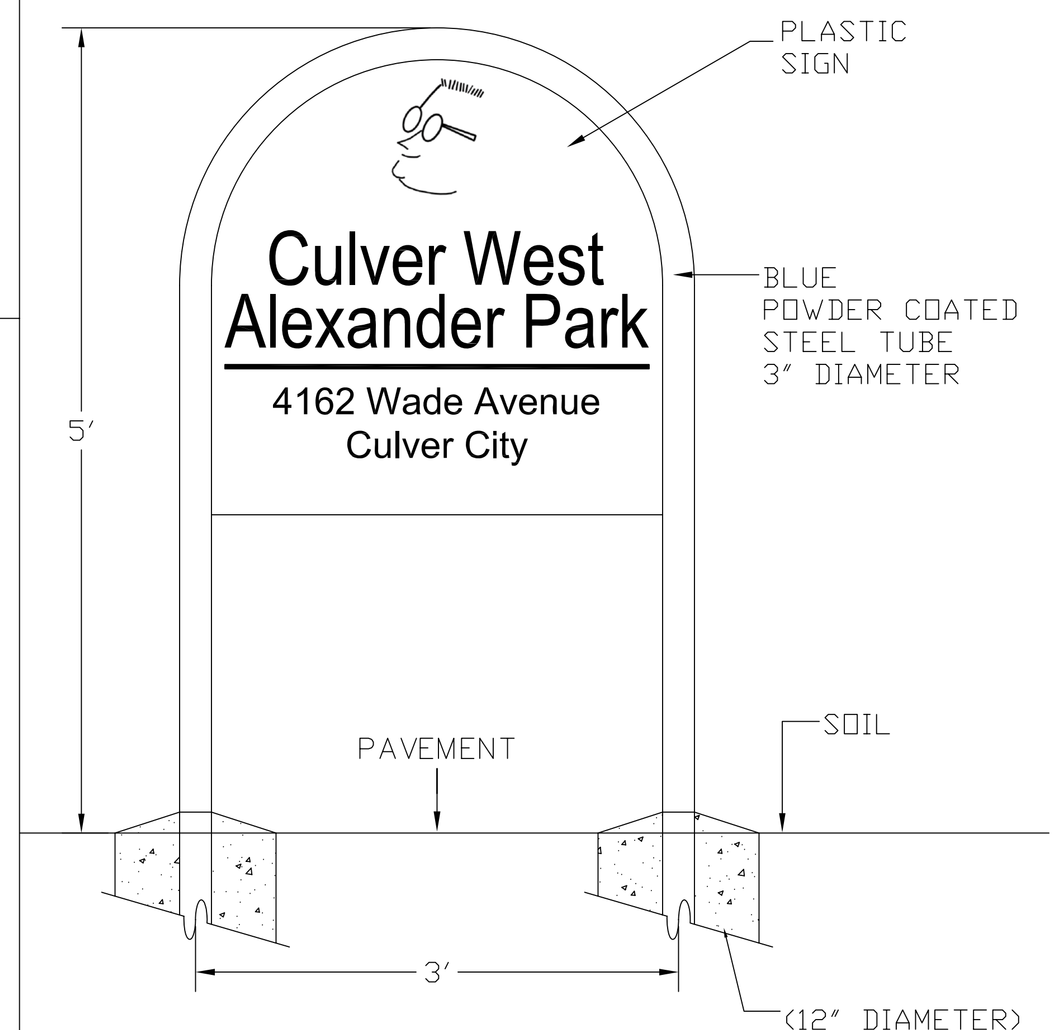

1 NEW PARK SIGN (2 LOCATIONS)
1-1/2″ = 1′-0″

Project Architect:
Victor M. Weisberg
RTI CONSULTING, INC.
8325 Mc Connell Avenue
Westchester, CA 90045
PH 310.670.5977 FX 310.919.3030
Email: vic.weisberg@rticm.com

Date: Exp Date:

Construction Manager:
RTI CONSULTING, INC.
8325 McConnell Avenue
Westchester, CA 90045
PH 310.670.5977 FX 310.919.3030
Email: bob.neiwirth@rticm.com

Client:
CITY OF CULVER CITY

Project No:

No.	Date	Description
1	04/26/07	ISSUED TO CLIENT

Project Name:
CULVER WEST ALEXANDER PARK

Project No: CAD File No:

Drawing Title:
SIGNS

Drawn By: PA
Scale: AS NOTED

Drawing No:
A1.04

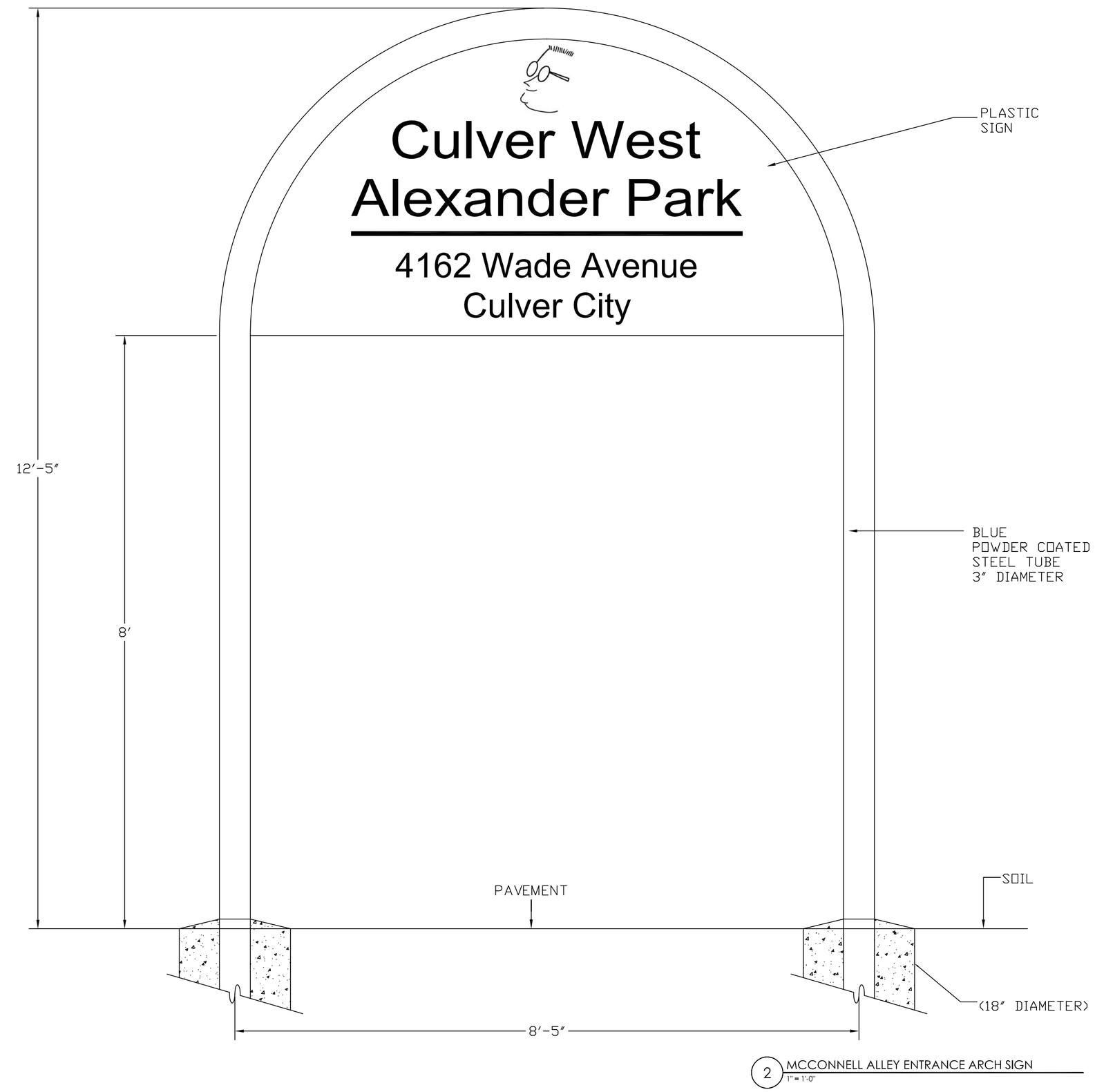

2 MCCONNELL ALLEY ENTRANCE ARCH SIGN
1" = 1'-0"

PLUMBING, ELECTRICAL AND SIGN DESIGN WORK NOTES

1. PLUMBING, ELECTRICAL AND SIGN WORK SHALL BE PERFORMED AS DESIGN–BUILD WORK UNDER THE GENERAL CONTRACTOR.

2. CONTRACTOR SHALL SUBMIT TO THE OWNER PHOTOCOPIES OF ALL CERTIFICATES OR LICENSES WHICH CONFIRM COMPLIANCE WITH STATE LICENSING LAWES WITHIN SEVEN (7) DAYS AFTER EXECUTION OF THIS AGREEMENT.

3. FOR THE PUROSES OF THE WORK DEFINED UNDER THIS AGREEMENT, THE TERM CONSTRUCTION DOCUMENTS SHALL MEAN THE FINAL DESIGN DRAWINGS AND SPECIFICATION PREPARED BY THE CONTRACTOR AND ISSUED FOR CONSTRUCTION OF THE WORK.

4. THE CONTRACTOR DESIGN AND ENGINEERING SERVICES SHALL PRODUCE ACCURATE, COMPLETE, COORDINATED, AND CODE COMPLIANT CONSTRUCTION DOCUMENTS PURSUANT TO THIS AGREEMENT.

5. THE CONTRACTOR AGREES AND REPRESENTS THAT IT SHALL BE RESPONSIBLE FOR THE PROFESSIONAL QUALITY, TECHNICAL ACCURACY, AND THE COORDINATION OF ALL DESIGNS, DRAWINGS, SPECIFICATIONS, AND OTHER SERVICES FURNISHED BY THE CONTRACTOR UNDER THIS AGREEMENT. COORDINATION SHALL INCLUDE, BUT NOT BE LIMITED TO, ALL NECESSARY COORDINATION WITH OTHER CONSULTANTS AND CONTRACTORS RETAINED BY THE OWNER. THE AGREEMENTS AND REPRESENTATIONS PROVIDED BY THE CONTRACTOR IN THIS AGREEMENT SHALL SURVIVE COMPLETION OF THIS CONTRACT AND EXTEND, AT A MINIMUM FOR SUCH PERIOD OF TIME DURING WHICH A CLAIM ARISING OUT OF THE PROJECT MAY BE MADE AGAINST THE ARCHITECT, THE CONSTRUCTION MANAGER AND/OR THE OWNER.

6. THE CONTRACTOR SHALL PREPARE, FOR REVIEW BY THE ARCHITECT AND PROMPTLY BY THE OWNER, THE DESIGN DEVELOPMENT DOCUMENTS FOR THE WORK CONSISTING OF DRAWINGS, OUTLINE SPECIFICATIONS AND OTHER DOCUMENTS TO FIX AND DESCRIBE THE SIZE AND CHARACTER OF THE ENTIRE WORK AS TO SYSTEMS, MATERIALS AND OTHER ELEMENTS AS MAY BE NECESSARY TO DESCRIBE THE QUALITY AND THE EXTENT OF THE WORK. UPON APPROVAL OF THE CONTRACTOR'S DESIGN DEVELOPMENT DRAWINGS AND ANY ADJUSTMENTS AUTHORIZED IN WRITING BY THE OWNER, THE CONTRACTOR SHALL PREPARE, FOR REVIEW, BY THE ARCHITECT AND APPROVAL BY THE OWNER, THE CONSTRUCTION DOCUMENTS FOR THE WORK, WHICH SHALL INCLUDE TECHNICAL DRAWINGS, SCHEDULES, DIAGRAMS AND SPECIFICATIONS, SETTING FORTH IN DETAIL THE REQUIREMENTS FOR CONSTRUCTION OF THE WORK (INCLUDING COORDINATION WITH RELATED WORK BY OTHERS), AND SHALL FURTHER DEVELOP THE INTENT OF THE DESIGN DEVELOPMENT DRAWINGS TO DESCRIBE IN DETAIL THE MANNER IN WHICH THE WORK WILL FULFILL THE USE FOR WHICH IT IS INTENDED, PROVIDE DETAILED INFORMATION NECESSARY FOR THE USE OF THE ARCHITECT, THE CONSTRUCTION MANAGER, THE OWNER, OTHER CONTRACTORS AND CONSULTANTS RETAINED BY THE OWNER AND OTHERS, AND INCLUDE DOCUMENTS REQUIRED BY BOTH PUBLIC AND PRIVATELY HELD REGULATORY AGENCY APPROVALS. THE REVIEW AND APPROVAL OF SCHEMATIC DESIGN DOCUMENTS, DESIGN DEVELOPMENT DOCMENTS AND CONSTRUCTION DOCUMENTS SUBMITTED BY THE CONTRACTOR SHALL ONLY BE MADE FOR THE PURPOSE OF THE CONTRACTOR'S GENERAL COMPLIANCE WITH THE CONTRACT DOCUMENTS AND DOES NOT RELIEVE THIS CONTRACTOR OF ITS SOLE RESPONSIBILITY TO PROVIDE ALL DESIGN SERVICES AS REQUIRED FOR THE WORK. CONTRACTOR SHALL NOT PROCEED WITH THE CONSTRUCTION OF THE WORK UNLESS AND UNTIL THE CONTRACTOR'S CONSTRUCTION DOCUMENTS HAVE BEEN REVIEWED BY THE ARCHITECT AND APPROVED BY THE OWNER.

7. THE CONTRACTOR SHALL PREPARE DOCUMENTS AND SSIST THE OWNER IN FILING DOCUMENTS REQUIRED TO OBTAIN THE NECESSAY APPROVALS AND PERMITS FROM GOVERMENTAL AUTHORITIES HAVING JURISDICTION OVER THE PROJECT. IN THE CASE OF THE ELECTRICAL, PLUMBING AND SIGN DISCIPLINES, THE CONTRACXTOR SHALL FILME THE REQUIRED DOCUMENTS AND SHALL OBTAIN THE NECESSARY APPROVALS AND PERMITS FROM GOVERNMENTAL AUTHORITIES HAVING JURISDICTION OVER THE PROJECT.

1 PLUMBING, SIGNS AND ELECTRICAL WORK NOTES
NO SCALE

Project Architect:
Victor M. Weisberg
RTI CONSULTING, INC.
8325 Mc Connell Avenue
Westchester, CA 90045
PH 310.670.5977 FX 310.919.3030
Email: vic.weisberg@rticm.com

Date: Exp Date:

Construction Manager:
RTI CONSULTING, INC.
8325 McConnell Avenue
Westchester, CA 90045
PH 310.670.5977 FX 310.919.3030
Email: bob.neiwirth@rticm.com

Client:
CITY OF CULVER CITY

Project No:

No.	Date	Description
1	04/26/07	ISSUED TO CLIENT

Project Name:
CULVER WEST ALEXANDER PARK

Project No: CAD File No:

Drawing Title:
MISCELLANEOUS

Drawn By: PA
Scale: AS NOTED

Drawing No:
A1.05

LANDSCAPE NOTES:

1. ALL EXISTING TREES TO REMAIN & SHALL BE PROTECTED FROM ANY CONSTRUCTION ACTIVITY.
2. ANY TREE ROOT PRUNNING FOR ADJACENT CONSTRUCTION, IE: JOGGING PATH, SHALL BE DONE BY HAND, NO TREE ROOTS SHALL BE SEVERED BY MECHANICAL EQUIPMENT.
3. NEW TREES SHALL BE HEALTHY, DISEASE & PEST FREE & SHALL NOT BE ROOT BOUND IN THE BOX. ANY TREE WITH THESE CONDITIONS WILL BE REJECTED & REPLACED AT CONTRACTOR'S EXPENSE.
4. TREES SHALL BE LOCATEDPER THE LANDSCAPE PLAN. FINAL LOCATION AND ANY ADJUSTMENT TO BE APPROVED BY LANDSCAPE ARCHITECT PRIOR TO PLANT INSTALLATION.
5. TREES SHALL BE INSTALLED PER DETAIL 1/A1.03.
6. TREES SHALL BE DEEP WATERED BY HOSE DURING PLANT ESTABLISHMENT PERIOD.
7. DROUGHT TOLERANT SHRUBS SHALL BE PLANTED IN EXISTING AREA SOUTH OF RECREATION BUILDING (SEE SHRUBS ON LANDSCAPE LEGEND.
8. DROUGHT TOLERANT SHRUBS SHALL BE LOCATED BY LANDSCAPE ARCHITECT.
9. DROUGHT TOLERANT SHRUBS SHALL BE INSTALLED PER LANDSCAPE ARCHITECT.
10. NEW TURF TO BE INSTALLED PER NOTES #10, A1.02.

KEY

EXISTING TREE

NEW TREE

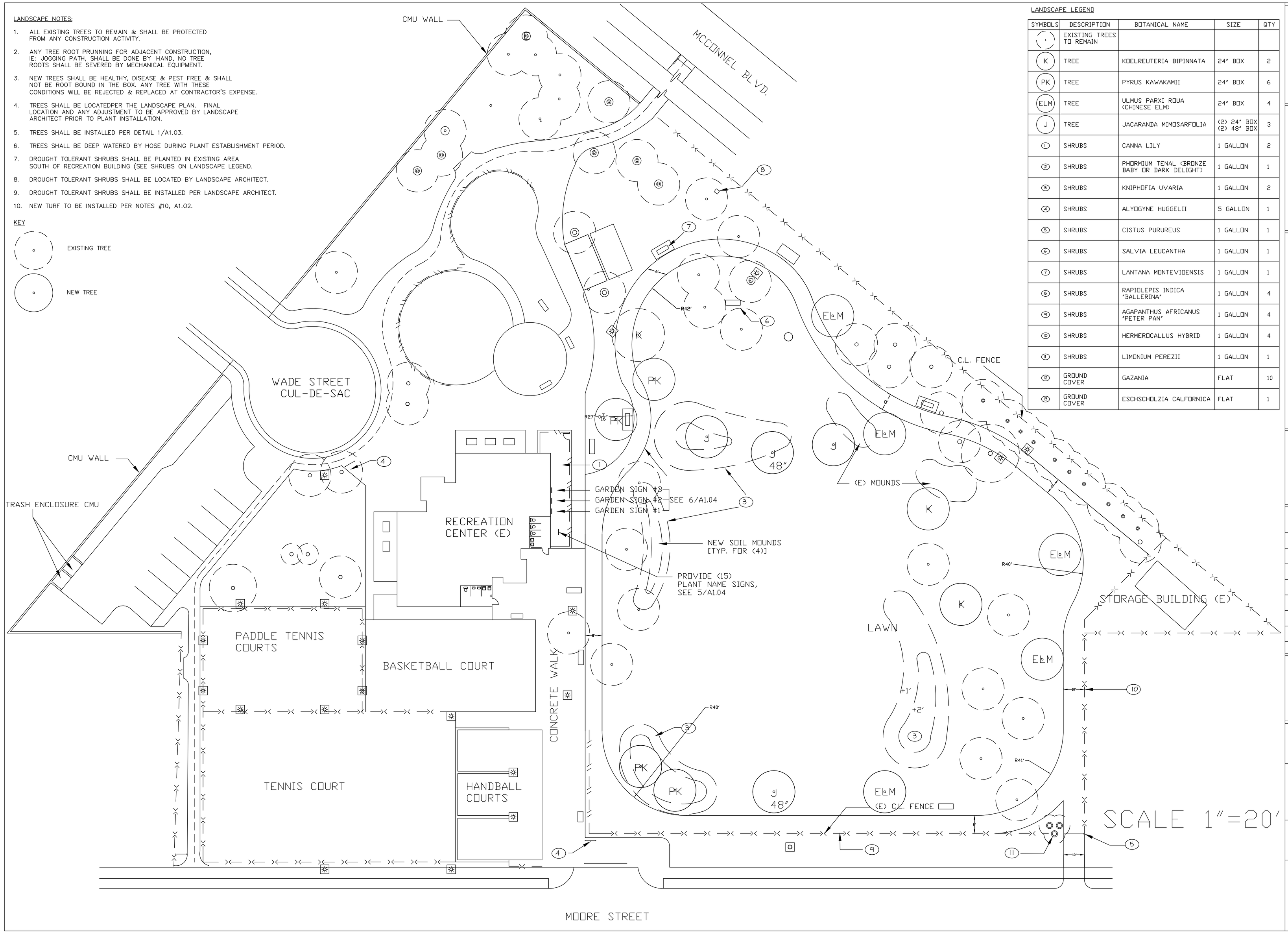

LANDSCAPE LEGEND

SYMBOLS	DESCRIPTION	BOTANICAL NAME	SIZE	QTY
	EXISTING TREES TO REMAIN			
K	TREE	KOELREUTERIA BIPINNATA	24" BOX	2
PK	TREE	PYRUS KAWAKAMII	24" BOX	6
ELM	TREE	ULMUS PARXI ROUA (CHINESE ELM)	24" BOX	4
J	TREE	JACARANDA MIMOSARFOLIA	(2) 24" BOX (2) 48" BOX	3
1	SHRUBS	CANNA LILY	1 GALLON	2
2	SHRUBS	PHORMIUM TENAL (BRONZE BABY OR DARK DELIGHT)	1 GALLON	1
3	SHRUBS	KNIPHOFIA UVARIA	1 GALLON	2
4	SHRUBS	ALYOGYNE HUGGELII	5 GALLON	1
5	SHRUBS	CISTUS PURUREUS	1 GALLON	1
6	SHRUBS	SALVIA LEUCANTHA	1 GALLON	1
7	SHRUBS	LANTANA MONTEVIDENSIS	1 GALLON	1
8	SHRUBS	RAPIOLEPIS INDICA 'BALLERINA'	1 GALLON	4
9	SHRUBS	AGAPANTHUS AFRICANUS 'PETER PAN'	1 GALLON	4
10	SHRUBS	HERMEROCALLUS HYBRID	1 GALLON	4
11	SHRUBS	LIMONIUM PEREZII	1 GALLON	1
12	GROUND COVER	GAZANIA	FLAT	10
13	GROUND COVER	ESCHSCHOLZIA CALFORNICA	FLAT	1

Project Architect:

Victor M. Weisberg
RTI CONSULTING, INC.
8325 Mc Connell Avenue
Westchester, CA 90045
PH 310.670.5977 FX 310.919.3030
Email: vic.weisberg@rticm.com

Date: Exp Date:

Construction Manager:

RTI CONSULTING, INC.
8325 McConnell Avenue
Westchester, CA 90045
PH 310.670.5977 FX 310.919.3030
Email: bob.neiwirth@rticm.com

Client:

CITY OF CULVER CITY

Project No:

No.	Date	Description
1	04/26/07	ISSUED TO CLIENT

Project Name:

CULVER WEST ALEXANDER PARK

Project No: CAD File No:

Drawing Title:

LANDSCAPE PLAN

Drawn By: PA

Scale: AS NOTED

Drawing No:

L1.00

CULVER WEST ALEXANDER PARK, PHASE II IRRIGATION NOTES

1. EXISTING IRRIGATION SYSTEM IN PARK IS TO REMAIN WITH THE FOLLOWING MODIFICATIONS
   A. ADD IRRIGATION FOR NEW TURF AREA TO BE ADDED AT EXISTING SOFTBALL INFIELD USING RAINBIRD #6504 IRRIGATION HEADS, FINAL LOCATION OF HEADS TO BE APPROVED BY CITY INSPECTOR PRIOR TO INSTALLATION PER DETAIL 3/A1.03.
   B. ADD IRRIGATION FOR EXISTING TURFG AREA TO BE ADDED BETWEEN MOORE STREET SIDEWALK AND EXISTING FENCE ALONG WEST SIDE OF PARK, PER DETAIL #_____.
   C. REPLACE EXISTING CALSENSE CONTROLLER(EXISTING ENCLOSURE TO REMAIN).
   D. REPLACE ALL EXISTING REMOTE CONTROL VALVES USING RAINBIRD 'GB SERIES'. SIZE AS NOTED. PER DETAIL 6/A1/03
   E. ADD (2) IRRIGATION QUICK COUPLER VALVES, PER DETAIL #_____.
   F. ADD (4) IRRIGATION REMOTE CONTROL VALVES FOR NEW TURF AREA AT EXISTING SOFTBALL INFIELD, AND FOR EXISTING TURF AREA BETWEEN FENCE AND SIDEWALK AT WEST SIDE OF PARK, USING RAINBIRD 'GB SERIES', SIZE AS NOTED. PER DETAIL 6/A1.03.

2. IRRIGATION SYSTEM SHALL BE TESTED/INSPECTED BY CITY INSPECTOR FOR PROPER OPERATION PRIOR TO PLANTING OR SEEDING.

3. IRRIGATION SYSTEM SHALL BE AS SPECIFIED ON FOLLOWING EQUIPMENT LIST:
   A. LARGE TURF GEAR ROTOR HEADS: RAINBIRD #6405, F4-PC AND F4-FC.
   B. SMALL TURF SPRAY HEADS: TORO #5702-4P
   C. REMOTE CONTROL VALVES: RAINBIRD #200-GB (2")
   D. QUICK COUPLER VALVES: RAINBIRD #5LRC-1".
   E. MAIN LINE AND LATERAL LINE: SCHEDULE 40 PVC
   F. CONTROLLER: (1) CALSENSE #ET2000-24-LR-FRE-TPP
   G. HAND REMOTE CONTROL: (2) CALSENSE #RRE-TRAN
   H. CONTROLLER ANTENNA: (1) CALSENSE # LR-DOME-RRE (TO BE INSTALLED ON EXISTING CONTROLLER ENCLOSURE).

4. NEW MAIN LINE TO BE PRESSURE TESTED IN OPEN TRENCH FOR 24 HOURS AT 120 PSI, TO BE INSPECTED/APPROVED BY CITY INSPECTOR. MAIN LINE INSTALLATION PER DETAIL #_____.

5. REMOTE CONTROL VALVES AND QUICK COUPLER VALVES TO BE INSTALLED IN GREEN PLASTIC VALVE BOXES, PER DETAIL #_____ AND DETAIL #_____.

IRRIGATION LEGEND

SYMBOLS	DESCRIPTION
	NEW REMOTE CONTROL VALVES
	NEW QUICK COUPLER VALVE
	NEW LARGE TURF ROTOR HEADS -RAINBIRD #6805
	EXISTING SPRAY HEADS
	NEW SMALL TURF SPRAY HEADS TORO #5702

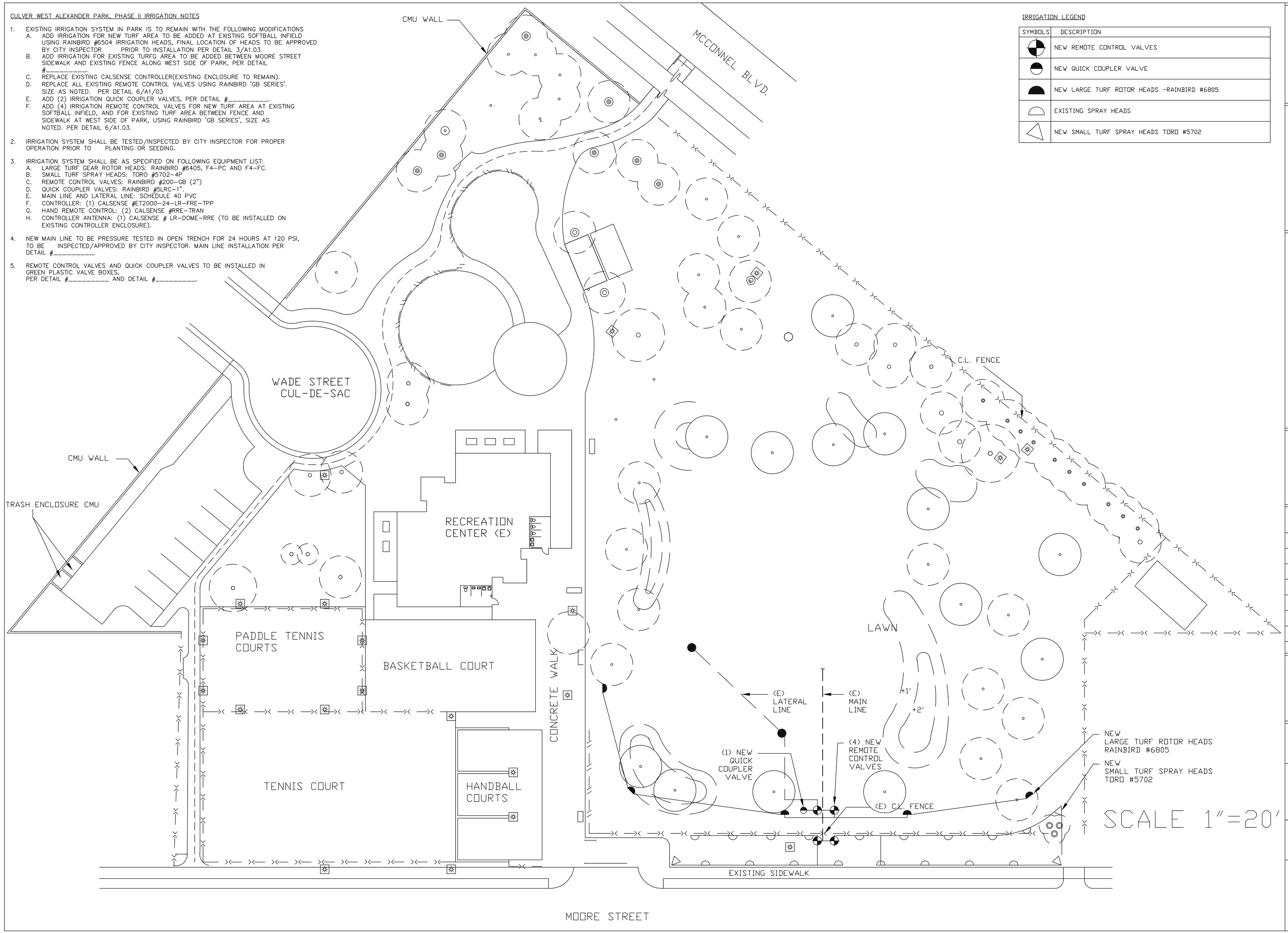

Project Architect:

Victor M. Weisberg
RTI CONSULTING, INC.
8325 Mc Connell Avenue
Westchester, CA 90045
PH 310.670.5977 FX 310.919.3030
Email: vic.weisberg@rticm.com

Date: Exp Date:

Construction Manager:

RTI CONSULTING, INC.
8325 McConnell Avenue
Westchester, CA 90045
PH 310.670.5977 FX 310.919.3030
Email: bob.neiwirth@rticm.com

Client:

CITY OF CULVER CITY

Project No:

No.	Date	Description
1	04/26/07	ISSUED TO CLIENT

Project Name:

CULVER WEST ALEXANDER PARK

Project No: CAD File No:

Drawing Title:

IRRIGATION PLAN

Drawn By: PA

Scale: AS NOTED

Drawing No:

L2.00