STABILIZED DECOMPOSED GRANITE SURFACE SPECIFICATION

PART 1: GENERAL

1.1 SCOPE OF WORK
A. WORK INCLUDED IN THIS SECTION.
1. DECOMPOSED GRANITE PAVING WITH BINDER ADDITIVE.

1.2 SYSTEM DESCRIPTION
A. DECOMPOSED GRANITE.

1.3 SUBMITTALS
A. PRODUCTS; FIVE LB SAMPLE AND SIEVE ANALYSIS FOR GRADING OF DECOMPOSED GRANITE.

1.4 TESTS
A. PERFORM GRADATION OF DECOMPOSED GRANITE MATERIAL IN ACCORDANCE WITH ASTM C 136 – METHOD FOR SIEVE ANALYSIS FOR FINE AND COURSE.

1.5 MOCK–UPS
A. INSTALL 4 FT. WIDE X 10 FT LONG MOCK UPS OF DECOMPOSED GRANITE PAVING WITH ADDITIVE AT LOCATION AS DIRECTED BY OWNER'S REPRESENTATIVE.

1.6 ENVIRONMENTAL CONDITIONS
A. DO NOT INSTALL DECOMPOSED GRANITE PAVING DURING RAINY CONDITIONS.

1.7 QUALITY ASSURANCE
A. INSTALLER PROVIDE EVIDENCE TO INDICATE SUCCESFUL EXPERIENCE IN PROVIDING DECOMPOSED GRANITE PAVING CONTAINING BINDER ADDITIVE.

1.8 EXCESS MATERIALS
A. PROVIDE OWNER'S AUTHORIZATION REP[. WITH THE FOLLOWING EXCESS MATERIALS FOR USE IN FUTURE DECOMPOSED GRANITE OR ⅜"OR ¼"CRUSHED AGGREGATE PAVING REPAIR (10) 40–50 LB BAGS OF THE AGGREGATE PAVING 1 – 40 LB BAG OF THE ADDITIVE.

PART 2: PRODUCTS

2.1 DECOMPOSED GRANITE SCREENINGS
A. CRUSHED STONE SIEVE ANALYSIS PERCENTAGE OF WEIGHT PASSING
A. SQUARE MESH SIEVE AASHTO T11–82 AND T27–82

1/4" MINUS AGGREGATE GRADATION

SIEVE DESIGNATION	RANGE OF % PASSING
3/8"	100
NO. 4	95–100
NO. 8	75–80
NO. 16	55–65
NO. 30	40–50
NO. 50	25–35
NO. 100	20–25
NO. 200	5–15

B. ACCEPTABLE LOCAL SUPPLIER – CONTRACTOR TO SUBMIT FOR APPROVAL.

2.2 BINDER
A. NON TOXIC, ORGANIC BINDER THAT IS COLORLESS AND ODORLESS CONCENTRATED POWDER THAT BINDS DECOMPOSED GRANITE TOGETHER TO PRODUCE A FIRM SURFACE.

B. BINDER STABILIZER SOLUTIONS, INC. 1800–336–2468, OR APPROVED EQUAL.

PART 3: EXECUTION

3.1 BLENDING STABILIZER
A. BLEND 12–15 LBS OF BINDER PER TON OF DECOMPOSED GRANITE SCREENINGS. IT IS CRITICAL THAT THE BINDER BE THOROUGHLY AND UNIFORMLY MIXED THROUGHOUT DECOMPOSED GRANITE SCREENINGS.

3.2 PLACEMENT OF DECOMPOSED GRANITE SCREENINGS
A. UPON THROUGHOUT MOISTURE PENETRATION, COMPACT AGGREGATE SCREENINGS TO 95% RELATIVE COMACTION BY COMPACTION EQUIPMENT SUCH AS; DOUBLE DRUM ROLLER (2–4 TON) OR SINGLE DRUM ROLLER (1000 LBS) VIBRATORY PLATE LAMP. DO NOT BEGIN COMACTION FOR 6 HOURSE AFTER PLACEMENT AND UP TO 48 HOURS. MAXIMUM DEPTH OF EACH PLACEMENT SHALL BE 1–1/2". TOTAL DEPTH TO BE 3'.

B. TAKE CARE IN COMPACTING DECOMPOSED GRANITESCREENINGS WHEN ADJACENT TO PLANTING AND IRRIGATION SYSTEMS

3.3 REPAIRS AND PROTECTION
A. REMOVE AND REPLACE DECOMPOSED GRANITE PAVING THAT IS DAMAMGED, DEFECTIVE OR DOES NOT MEET REQUIREMENTS OF THIS SECTION.

11 STABILIZED DECOMPOSED GRANITE SPECIFICATIONS
NO SCALE

PARK TURF FIELD RENOVATON

SPECIFICATIONS

1. SPRAY ENTIRE TURF AREA WITH "SPEED ZONE" MANUFACTURED BY BASF TO ERADICATE BROADLEAF AND CLOVER.
2. SPRAY ENTIRE TURF AREA WITH "MSMA", MANUFACTURED BY ORTHO, TO ERADICATE CRAB GRASS, GOOSE GRASS AND NUTSEDGE.
3. AERIFY ENTIRE TURF AREA USING A SELF PROPELLED AERIFIER MACHINE WITH STANDARD 6" DEEP HOLES AT 1" OC–⅜" DIAMETER HOLLOW TINES, AND REMOVE CORES.
4. PLANT ENTIRE TURF AREA WITH WHITTET KIKUYU GRASS SEED APPLIED AT 25 LB./AC FROM STOVER SEED COMPANY. CONTACT JAMES CULLEY AT 1–800–621–0315.
5. COVER ENTIRE TURF AREA WITH 1" LAYER OF "TOPPER" (NITROLIZED REDWOOD COMPOST) FROM RECYCLED WOOD PRODUCTS. CONTACT PAT COLLINS AT 909–868–6882.
6. TURF ESTABLISHMENT PERIOD (45 DAYS) BEGINNING WHEN GRASS SEED IS PLANTED.
7. SEED SHALL NOT BE PLANTED UNTIL IRRIGATION SYSTEM IS OPERATING WITH COMPLETE COVERAGE.
8. SEED SHALL BE KEPT MOIST THROUGH GERMINATION, THEN IRRIGATED TO ENCOURAGE PROPER GROWTH THROUGH TURF ESTABLISHMENT PERIOD.
9. NEW GRASS SHALL BE MOWED 3–4 WEEKS AFTER GERMINATION AND ONCE MORE AT END OF TURF ESTABLISHMENT PERIOD.
10. TEMPORARY C.L. FENCE SHALL BE INSTALLED AROUND ENTIRE TURF FIELD FOR TURF ESTABLISHEMNT PERIOD (45 DAYS).

10 PARK TURF FIELD RENOVATIONS
NO SCALE

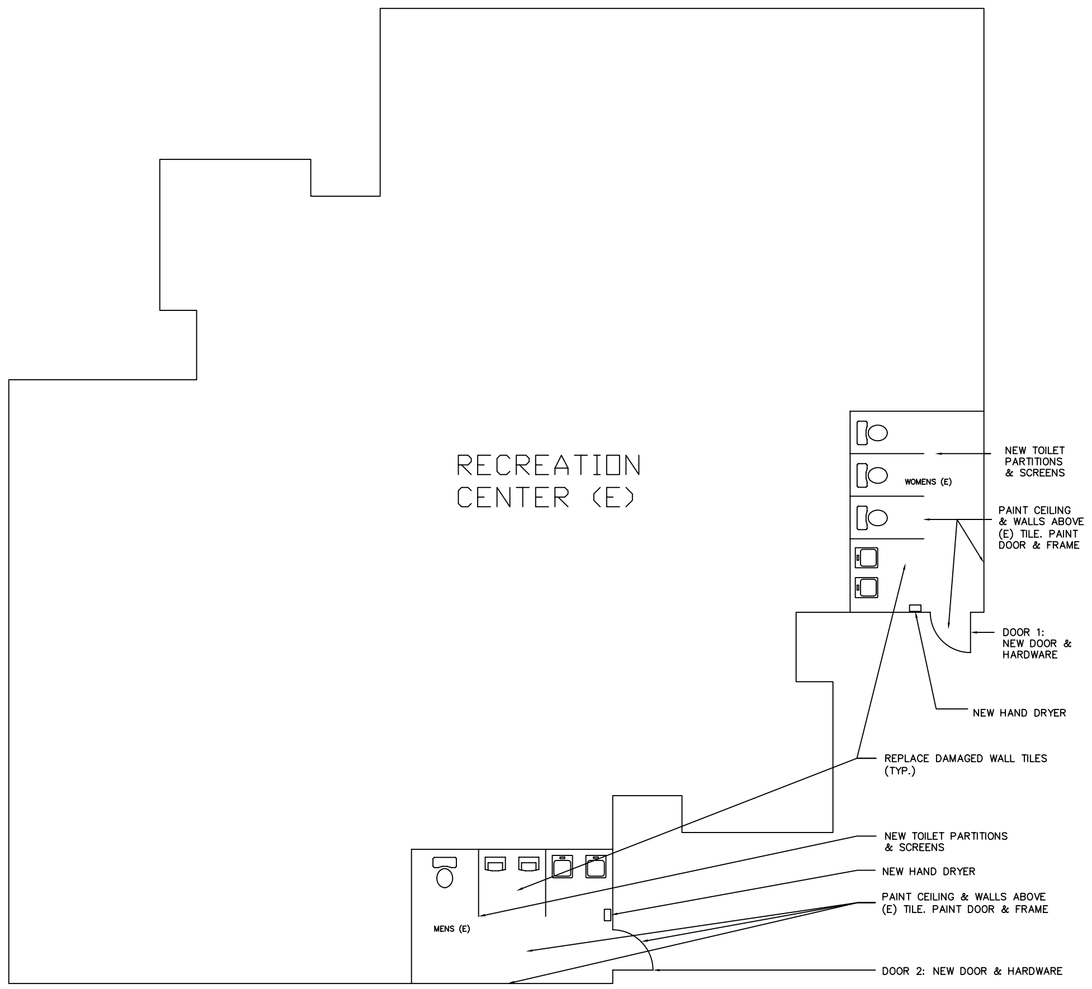

NEW WORK
NOTE: EXISTING TOILET FIXTURES TO REMAIN

DOOR 1:
NEW 1 3/4" THICK HM DOOR X EXIST HM FRAME. (BONDO & ALTER FRAME AS NECESSARY TO RECEIVE NEW HARDWARE)...RHR

PULL – HAGER H34G X 3 ½" X 15" US32D.

PUSH – HAGER 80S X 3 ½" X 15 X US32D

BUTTS – STANLEY FBB 168 4 ½" X 4 ½" X NRP X USP

CLOSER – LCN 4041 SERIES X PA X MC X HO X US32D

SURFACE MOUNTED SLIDE BOLT – SUGATSUME SSG–85 X US32D

PADLOCK
– BEST 21B72L X US32D X WC X BEST 7 PIN CYLINDER
KICKPLATE – HAGER 10"H X US32D

DOOR 2:
SAME AS DOOR 1 EXCEPT LHR

DOORS TO BE FLUSH DOORS, 16 GAUGE HONEYCOMB CORE

NEW TOILET PARTITIONS TO BE SANTANA SOLID PLASTIC FLOOR MOUNTED OVERHEAD BRACED PARTITIONS. LOCATED AT LOCATIONS OF PRESENT TOILET PARTITIONS TO BE REMOVED. NEW URINAL SCREEN TO BE SANTANA SOLID PLASTIC FLOOR MOUNTED OVERHEAD BRACED SCREEN, BRACED TO BACK WALL AND TO ADJACENT TOILET PARTITION AND TO BE LOCATED WHERE PRESENT URINAL SCREEN IS LOCATED. FABRICATION AND INSTALLATION TO BE PER MANUFACTURER'S STANDARDS AND RECOMMENDATIONS. COLOR: BLACK PAISLEY 090. SUBMIT SHOP DRAWINGS ((4) SETS) AND COLOR SAMPLE ((3) SAMPLES) FOR APPROVAL BY ARCHITECT.

PAINT NOTES
DOORS AND FRAMES TO BE PAINTED TWO COATS MINIMUM BENJAMIN MOORE MOOR CRAFT SUPER SPEC. D.T.M. ALKYD SEMI–GLOSS ENAMEL Z24 GRAFITTI COATING TO WALLS

WALLS AND CEILINGS TO BE PAINTED TWO COATS MINIMUM BENJAMIN MOORE MOORCRAFT SPEC ACRYLIC EPOXY COATING 256.

SURFACE PREPARATION AND PAINT APPLICATION TO BE IN STRICT ACCORDANCE W/ MANUFACTURER'S PRINTED INSTRUCTIONS.

COLORS TO BE DETERMINED.

ANTI GRAFFITI COATING
UPON CURING OF PAINT ON WALLS, APPLY "ND GRAFFITI SHIELD" TWO–PART FINISH SYSTEM AS MFG. BY NEW DIMENSIONS SOLUTIONS LLC, (800) 731–2231

HAND DRYER NOTES
BOBRICK #B–700, 115V, SURFACE MOUNTED AUTOMATIC HAND DRYER. ONE FOR MENS AND WOMENS BATHROOMS. CONNECT TO EXISTING POWER OUTLETS.

7 MEN & WOMENS BATHROOM PLANS & NOTES
1/8" = 1'-0"

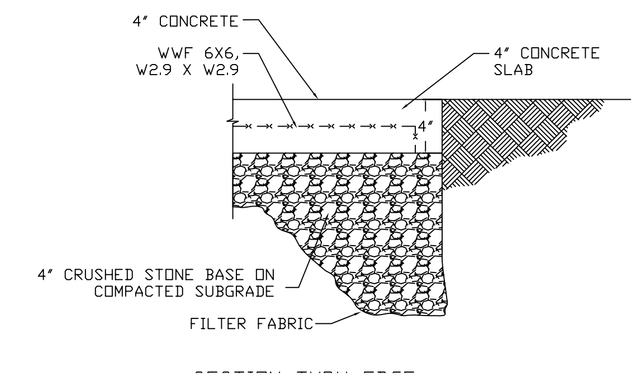

4 SECTION THRU EDGE & FAMILY PICNIC AREA
1-1/2" = 1'-0"

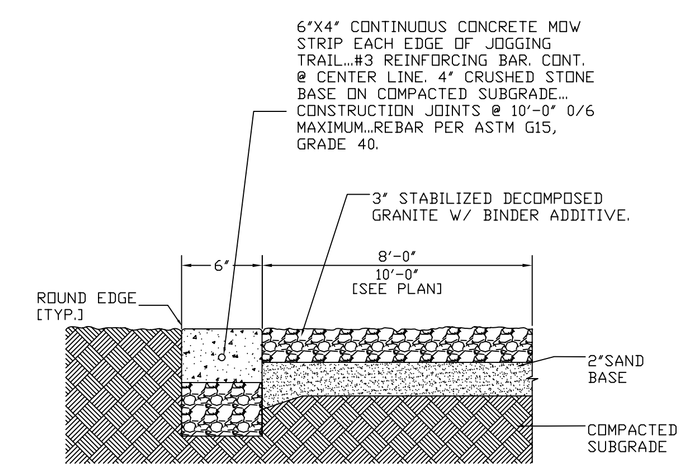

3 SECTION THRU JOGGING TRAIL
1-1/2" = 1'-0"

NOTES:

1. CURB CUT SHALL BE 6" CONCRETE WITH WWF 6X6, W2.9 X W2.9
2. CURB FOR TYPE C DRIVEWAY SHALL BE INTRGRAL AND MATCH ADJACENT CONSTRUCTION.

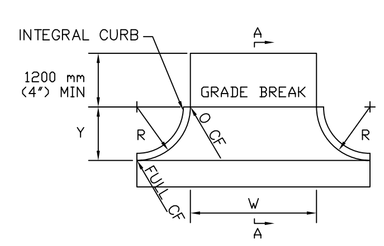

9 CURB CUT DETAIL
1-1/2" = 1'-0"

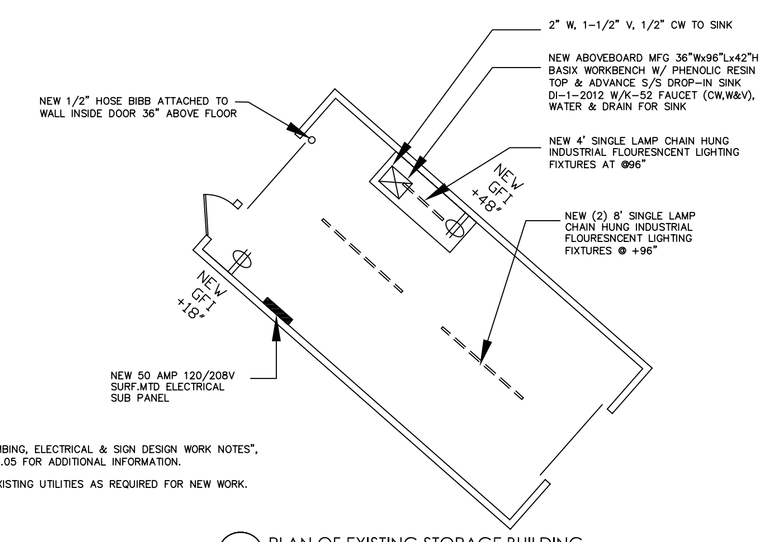

NOTES:

SEE "PLUMBING, ELECTRICAL & SIGN DESIGN WORK NOTES", DWG. 1/A1.05 FOR ADDITIONAL INFORMATION.

EXTEND EXISTING UTILITIES AS REQUIRED FOR NEW WORK.

6 PLAN OF EXISTING STORAGE BUILDING
1/8" = 1'-0"

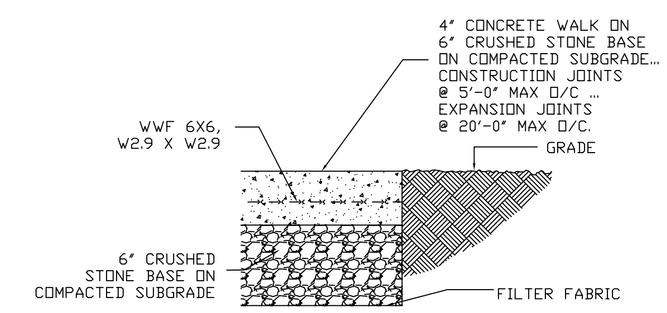

2 SECTION THRU CONCRETE WALKS & PADS
1-1/2" = 1'-0"

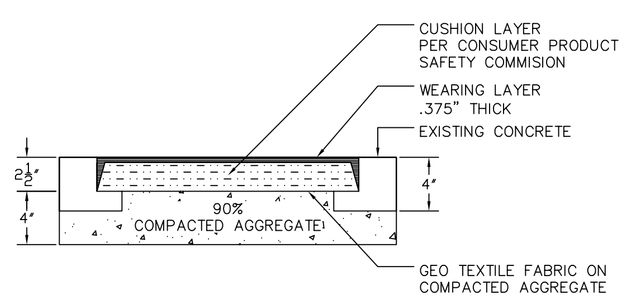

8 SPECTRA POUR SURFACING DETAIL
1-1/2" = 1'-0"

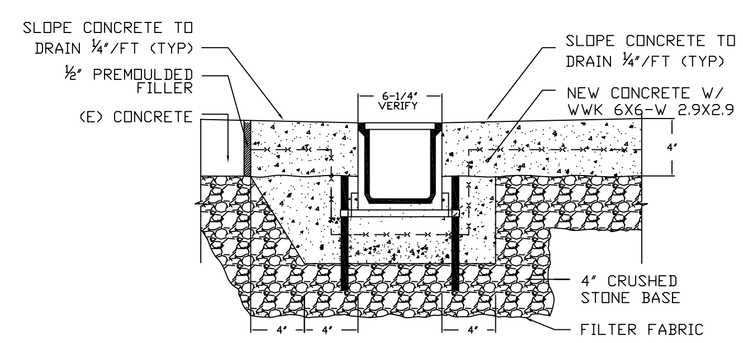

5 SECTION THRU NEW TRENCH DRAIN AT FAMILY PICNIC AREA
1-1/2" = 1'-0"

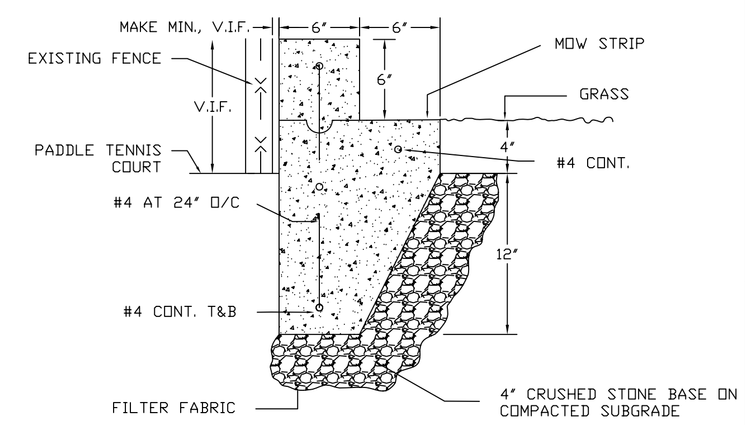

1 SECTION THRU CURB @ PADDLE TENNIS COURTS
1-1/2" = 1'-0"

Project Architect:
Victor M. Weisberg
RTI CONSULTING, INC.
8325 Mc Connell Avenue
Westchester, CA 90045
PH 310.670.5977 FX 310.919.3030
Email: vic.weisberg@rticm.com

Date: Exp Date:

Construction Manager:

RTI CONSULTING, INC.
8325 McConnell Avenue
Westchester, CA 90045
PH 310.670.5977 FX 310.919.3030
Email: bob.neiwirth@rticm.com

Client:
CITY OF CULVER CITY

Project No:

No.	Date	Description
1	04/26/07	ISSUED TO CLIENT

Project Name:
CULVER WEST ALEXANDER PARK

Project No: CAD File No:

Drawing Title:
DETAILS

Drawn By: PA
Scale: AS NOTED

Drawing No:
A1.02